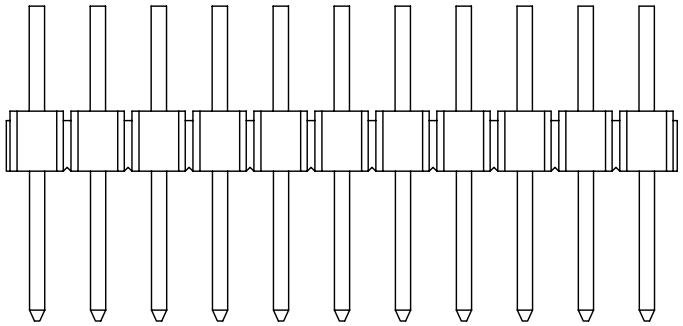

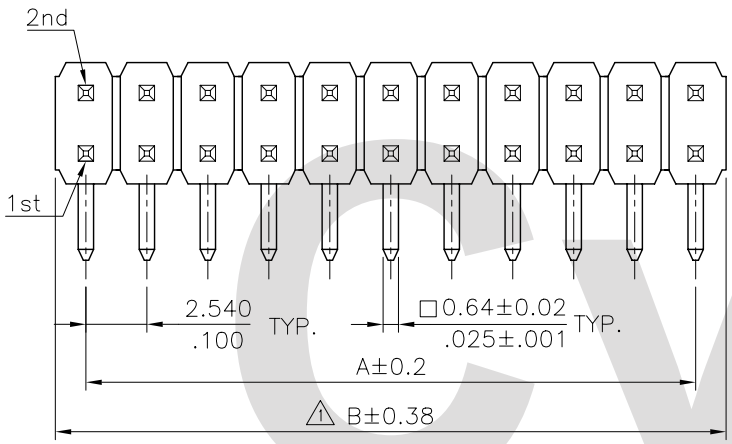

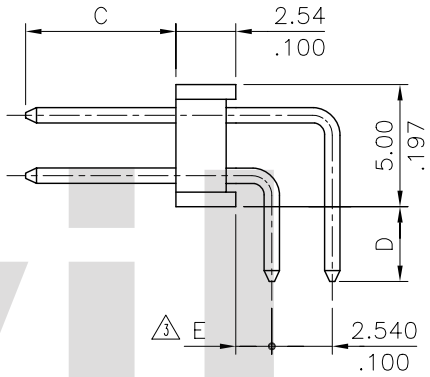

A = 2.54 * No. of Spaces

1 B = A + 2.36

* Available in 4 through 80 circuits

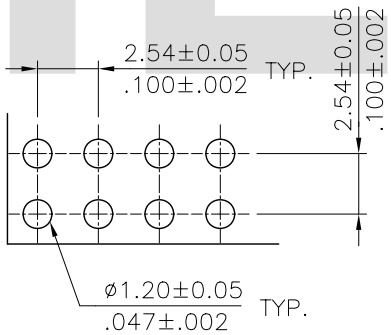

Recommended P.C. Board Layout

Material:

* Contact: Brass

Ordering Code

CH81 ** * H * **

① ② ③ ④ ⑤ ⑥

①Series No.

②No. of Circuits

2 ③Plating code:

1= 3.05μm(120μ") Min. Tin over 0.76μm(30μ") Nickel

2= Gold flash plated over 1.27μm(50μ") Nickel

④H= Right angle

5 ⑤Color: 2= PBT UL 94V-0, Color Black

A= Nylon 6T UL 94V-0, Color Black

⑥Pin Length Option Code:

See Table PDF. File No. CH8102T

RoHS Compliant

SYM	NAME	DATE	REVISIONS
4	SUN	1/21-06	ECN06019
3	SUN	11/18/05	ECN05392
2	LYNN	12/13-04	ECN04465/ECR04102-0
5	Bill	4/23/07'	ECN07148/ECR07059-0

CVILUX CORP. 2007.06.12 ISSUED

		DATE
DRAWN BY:	Bill	5/12 07'
ENGINEER:	Eisley	5/31 07'
CHECKED BY:	David	5/31 07'
APPROVED BY:	Alex	5/31 07'

UNIT: mm / inch

TOLERANCE UNLESS OTHERWISE SPECIFIED

.X ± 0.30/.012	X.° ± 1°
.XX ± 0.20/.008	.X° ±
.XXX ± 0.10/.004	.XX° ±

TITLE: 2.54MM(.100") RIGHT ANGLE DUAL ROW BOARD MOUNT PIN HEADER

MATERIAL:

FINISH:

瀚荃股份有限公司
CviLux Corporation

DRAWING NO.	CH8102SK	PART NO.	CH81***H***
SCALE	3 / 1	SHEET 1 OF 1	

cviLux