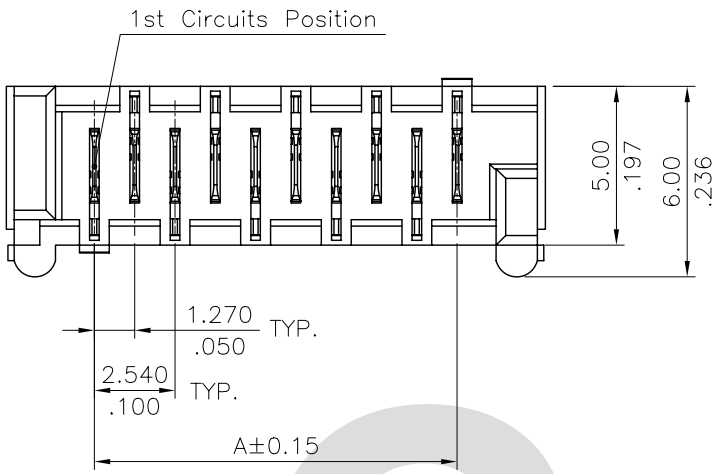

Material:

* Insulation:

Base: Glass filled polyester UL 94V-0

Contact: Brass

Ordering Code:

CA35	**	V	1	1	00	-	NH
①	②	③	④	⑤	⑥		⑦

① Series No.:

② No. of Circuits: 04 to 26

③ Contacts Type: V= Straight Type

④ Plating option:

1= Matte Tin over Nickel plated

⑤ Color: 1= Black

⑥ Option: 00= Standard

⑦ NH= For Lead Free IR Processes and Halogen-Free

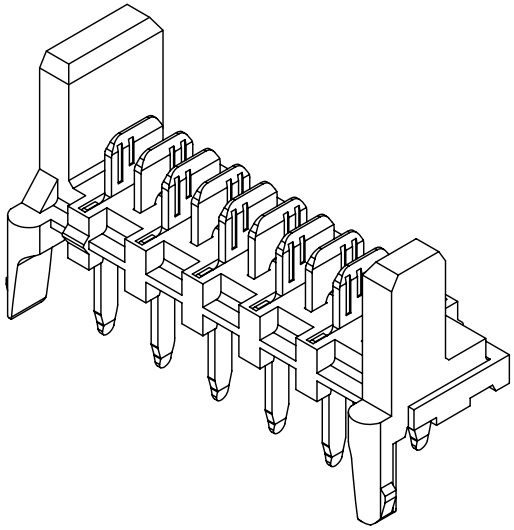

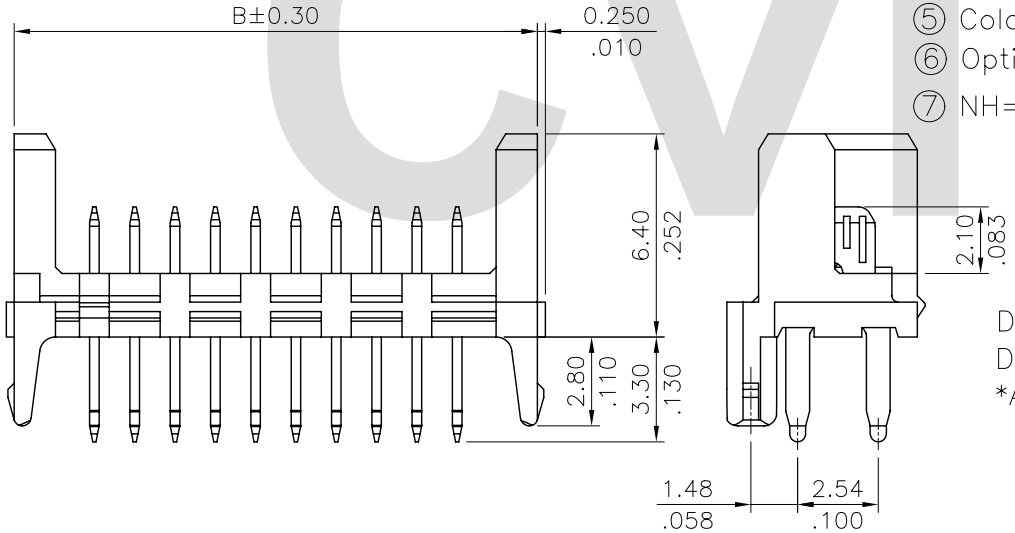

DIM.A= 1.27 x No. of Spaces

DIM.B= DIM.A + 5.05

*Available in 4 ~ 26 Circuits

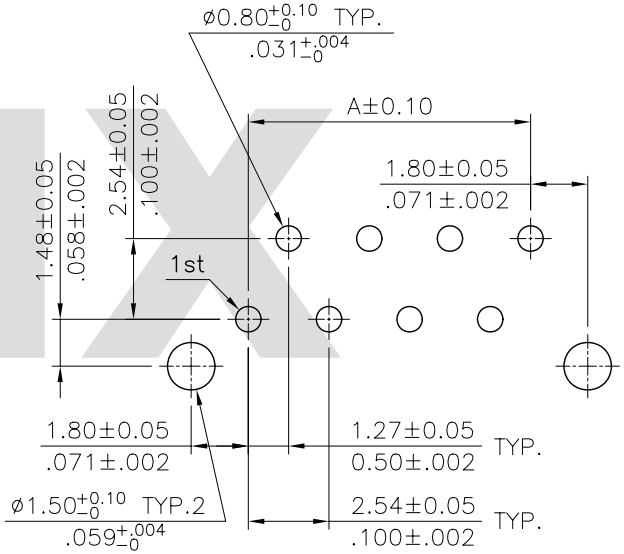

Recommended P.C. Board Layout

Halogen-Free | RoHS Compliant

SYM	NAME	DATE	REVISIONS
4			
3			
2			
1			

CVILUX CORP 2010.02.09 ISSUED

		DATE
DRAWN BY:	Clark	1/15-10'
ENGINEER:	Clark	1/18-10'
CHECKED BY:	Eisley	1/22-10'
APPROVED BY:	David	1/22-10'

UNIT: mm / inch

TOLERANCE UNLESS OTHERWISE SPECIFIED

.X ± 0.30/.012	X.° ± 1°
.XX ± 0.20/.008	.X° ±
.XXX ± 0.10/.004	.XX° ±

TITLE: 1.27mm Pitch DIP V Type Connector

MATERIAL:

FINISH:

瀚荃股份有限公司 CviLux Corporation

DRAWING NO.	CA3502SA	PART NO.	CA35**V1100-NH
SCALE	4 / 1	SHEET 1 OF 1	

CviLux