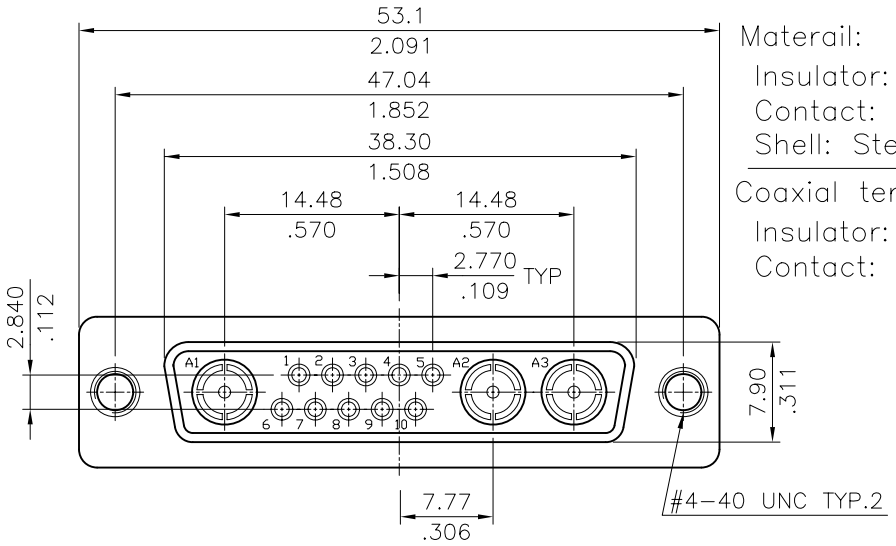

Materail:

Insulator: Glass filled Polyester UL 94V-0
Contact: Copper alloy
Shell: Steel, Tin plated as standard

Coaxial terminal

Insulator: Teflon UL 94V-0,Color white
Contact: Brass

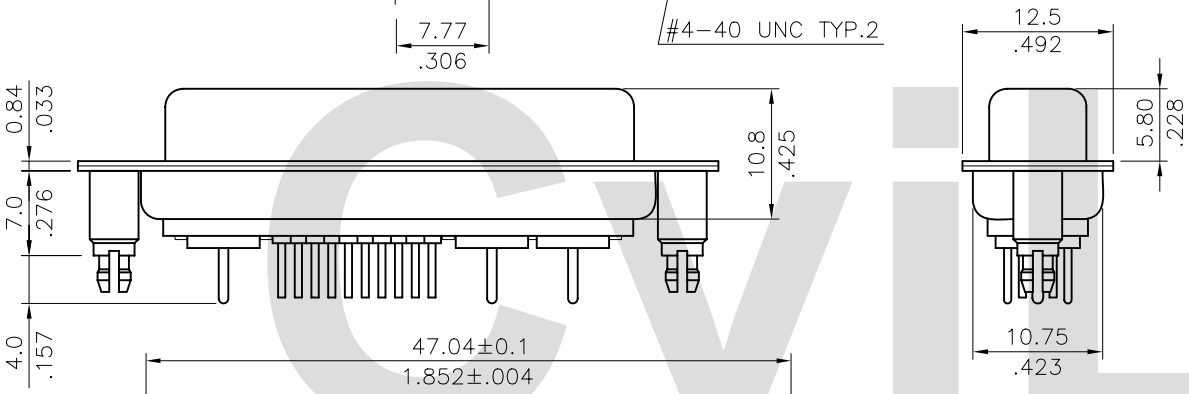

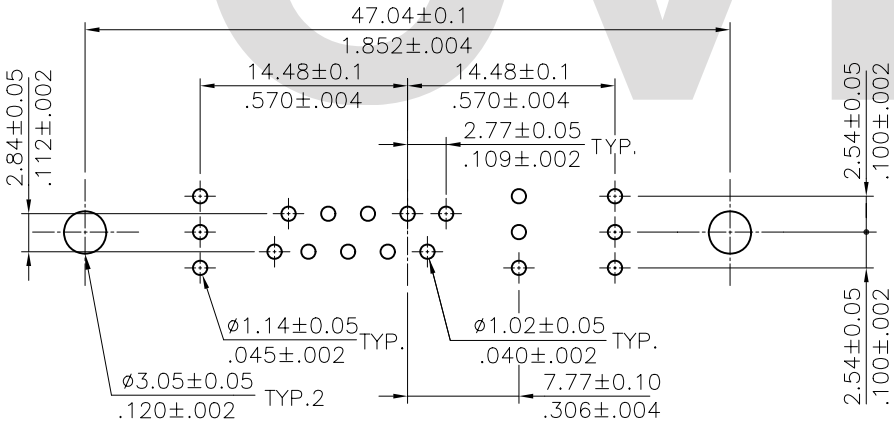

Recommended P.C Board Layout

Ordering Code

13W3	S	C	V	3	2	1	75	D00
①	②	③	④	⑤	⑥	⑦	⑧	⑨

① Series No.
② Connector Type: S= Receptacle
③ Contact type: C= Coaxiai Contact
④ Contact tail style: V= Straight Dip type
⑤ Coaxial contact plating:
2= Gold flash plated over Nickel
3= 15μ" Gold plated over Nickel
4= 30μ" Gold plated over Nickel
5= 50μ" Gold plated over Nickel
⑥ Singal contact plating:
2= Gold flash plated over Nickel
3= 15μ" Gold plated over Nickel
4= 30μ" Gold plated over Nickel
⑦ Insulator color: 1= Black, 6= Green
⑧ Performance: 50= 50Ω, 75= 75Ω
⑨ Mounting Style:
000= With ø3.05mm holes on shell
B00= Riveted #4-40 UNC open nuts on front shell
C00= Riveted #4-40 UNC open nuts on rear shell
D00= Riveted #4-40 UNC ground stand-off on rear shell(standard)

RoHS Compliant

Mounting Style

Code	000	Code	B00	Code	C00	Code	D00
		DIM. L= 4.0mm		DIM. L= 4.0mm		DIM. L= 7.0mm	

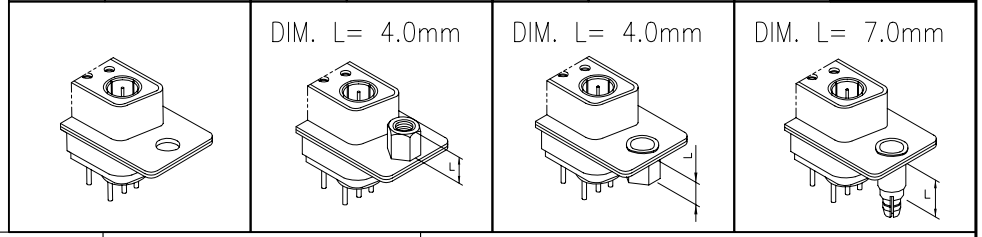

CviLux

SYM	NAME	DATE	REVISIONS
4			
3			
2			
1			

CVILUX.CORP 2001.10.22 ISSUED

		DATE
DRAWN BY:	Rita	10/18-01'
ENGINEER:	David	10/19-01'
CHECKED BY:	David	10/19-01'
APPROVED BY:	Alex	10/19-01'

UNIT: mm / inch

TOLERANCE UNLESS OTHERWISE SPECIFIED

.X ± 0.30/.012	X.° ± 1°
.XX ± 0.20/.008	.X° ±
.XXX ± 0.10/.004	.XX° ±

TITLE: 13W3 COAXIAL FEMALE D-SUB CONNECTOR (TOP ENTRY BOARD MOUNT TYPE)

MATERIAL:

FINISH:

瀚荃股份有限公司
CviLux Corporation

DRAWING NO.	13W304SB	PART NO.	13W3SCV******00
SCALE	2 / 1	SHEET 1 OF 1	