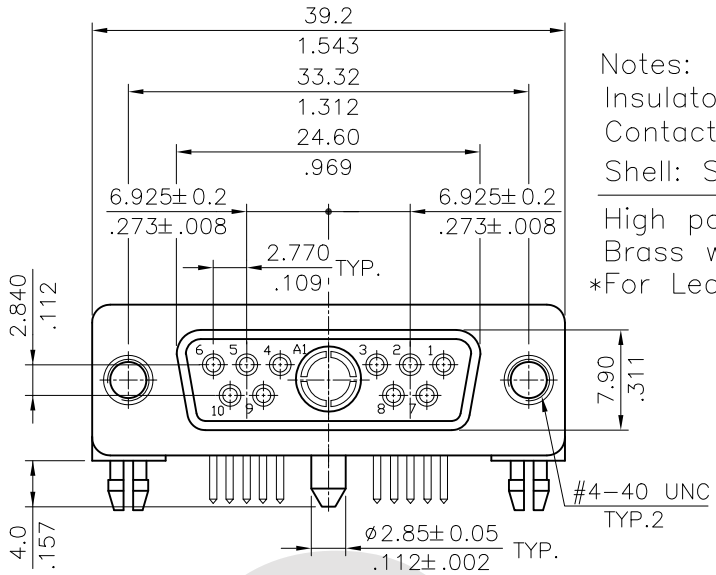


Notes:
Insulator: Glass filled Polyester UL 94V-0
Contact: Copper alloy
Shell: Steel, Tin plated as standard

High power Contact :
Brass with Gold plated
*For Lead Free Wave Flow Process

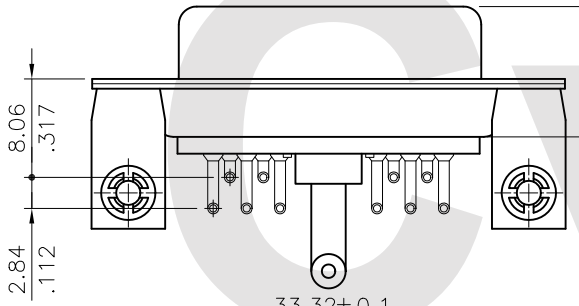


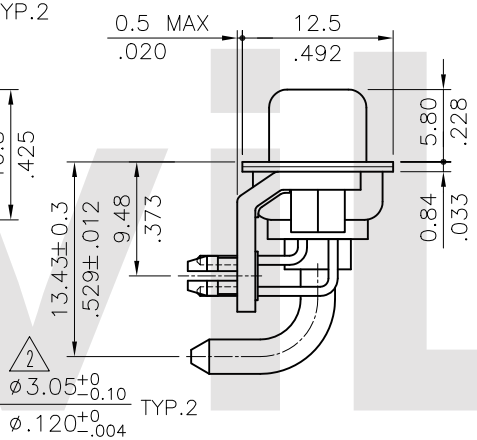


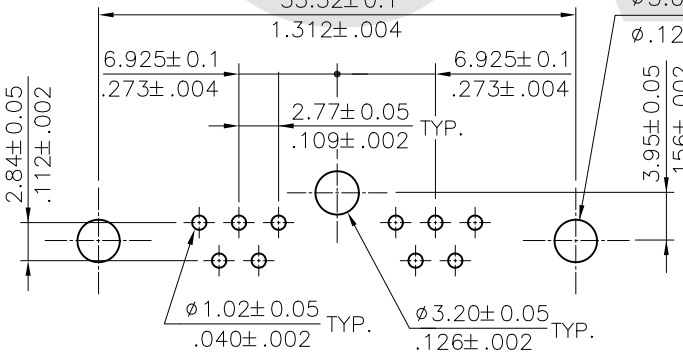


Recommended P.C Board Layout

# Ordering Code

| 11W1 | S | P | H | 3 | 2 | 1 | 20 | I10 |
|---|---|---|---|---|---|---|---|---|
| ① | ② | ③ | ④ | ⑤ | ⑥ | ⑦ | ⑧ | ⑨ |

① Series No.
② Connector Type: S= Receplate
③ Contact type: P= High Power Contact
④ Contact tail style: H= Right Angle Dip type
⑤ High power contact plating:
- 2= Gold flash plated over Nickel
- 3= 15μ" Gold plated over Nickel
- 4= 30μ" Gold plated over Nickel
- 5= 50μ" Gold plated over Nickel

⑥ Signal contact plating:
- 2= Gold flash plated over Nickel
- 3= 15μ" Gold plated over Nickel
- 4= 30μ" Gold plated over Nickel

⑦ Insulator color: 1= Black, 6= Green
⑧ Performance: 20= 20A
⑨ Mounting Style:
- 000= With ø3.05mm holes on shell
- B00= Riveted #4-40 UNC open nuts on front shell
- C00= Riveted #4-40 UNC open nuts on rear shell
- I00= Riveted #4-40 UNC ground tabs with ø3.2mm holes
- I10= Riveted #4-40 UNC ground tabs with board locks(standard)

Lead Free Process | RoHS Compliant

## Mounting Style

| Code 000 | Code B00 | Code C00 | Code I00 | Code I10 |
|---|---|---|---|---|
| 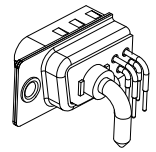 | DIM. L= 4.0mm 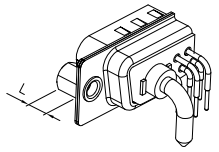 | DIM. L= 4.0mm 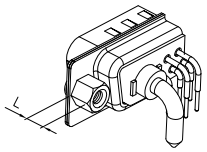 | ØA=3.2mm 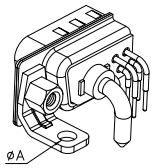 | 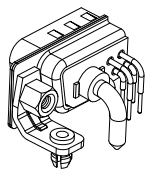 |

| SYM | NAME | DATE | REVISIONS |
|---|---|---|---|
| 4 | | | |
| 3 | | | |
| 2 | Karen | 4/07-17' | ECNT117049/ECRT117003 |
| 1 | Sun | 12/09-08' | ECN08604 |

CVILUX CORP 2017.04.20 ISSUED

| | | DATE |
|---|---|---|
| DRAWN BY: | Karen | 4/10-17' |
| ENGINEER: | Sun | 4/10-17' |
| CHECKED BY: | Eisley | 4/14-17' |
| APPROVED BY: | Eisley | 4/14-17' |

UNIT: mm / inch

TOLERANCE UNLESS OTHERWISE SPECIFIED

| | |
|---|---|
| .X ± 0.30/.012 | X.° ± 1° |
| .XX ± 0.20/.008 | .X° ± |
| .XXX ± 0.10/.004 | .XX° ± |

TITLE: 11W1 20A HIGH POWER FEMALE D-SUB CONNECTOR (RIGHT ANGLE TYPE)

MATERIAL:

FINISH:

瀚荃股份有限公司
CviLux Corporation

| DRAWING NO. | 11W112SD | PART NO. | 11W1SPH***20*** |
|---|---|---|---|
| SCALE | 2 / 1 | SHEET 1 OF 1 | |