Note:
Insulator: Nylon 6T+30% G.F UL 94V-0, Color Nature
Contact: Brass
Metal Pegs: Brass
Metal Pegs plating: Matte Tin plated over Nickel

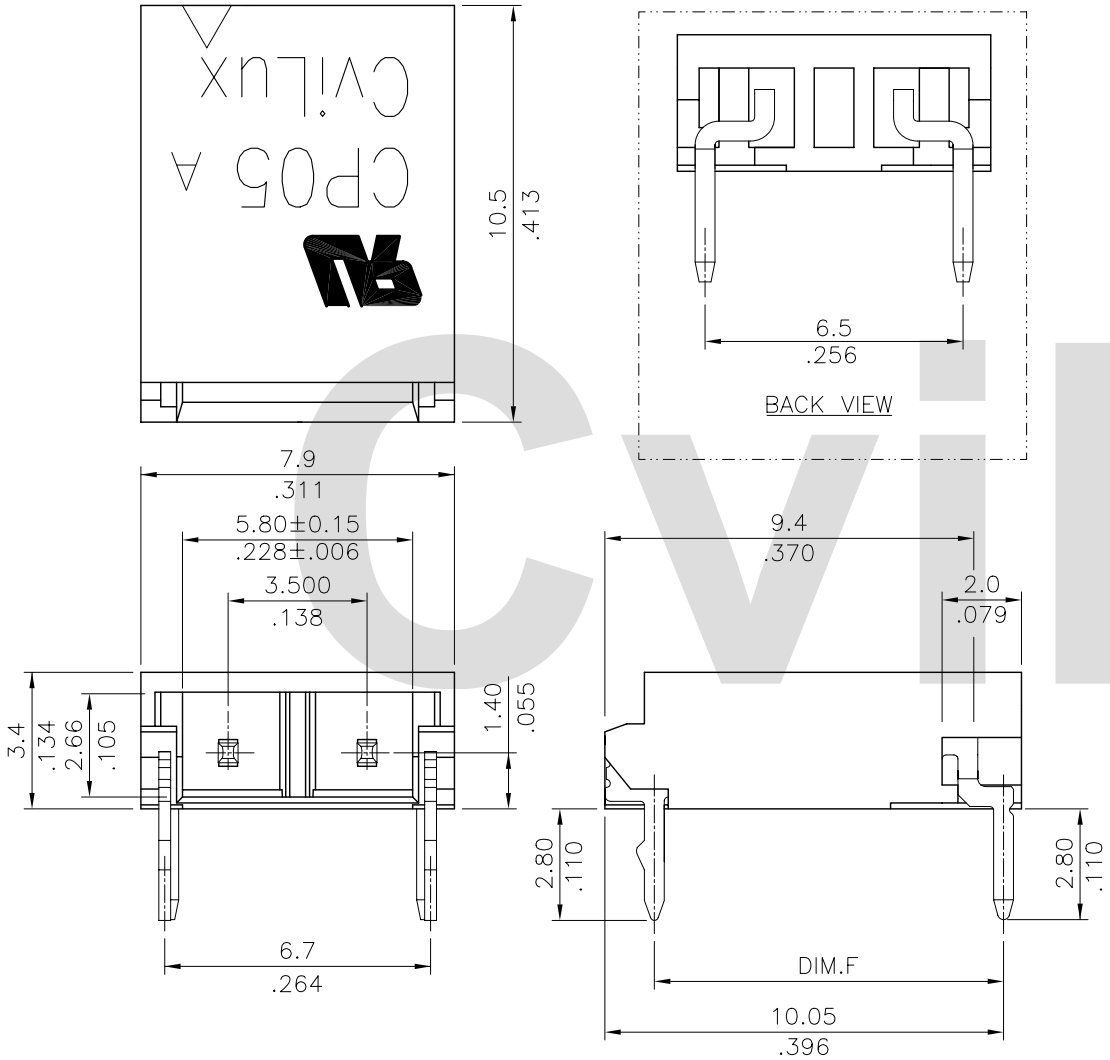

Ordering Code:

CP05 02 P 1 H T * -NH
① ② ③ ④ ⑤ ⑥ ⑦ ⑧

① Series No.
② Circuits: 02
③ P= Pin Header
④ Plating Code:
1= Matte Tin plated over Nickel
⑤ Contact type: H= Right angle DIP Type
⑥ Packing option: T= Tube Packing
⑦ Other option: 0= With metal pegs,DIM.F= 8.80mm
1= With metal pegs,DIM.F= 9.80mm
2= Without metal pegs
⑧ -NH= For Lead Free IR Processes and Halogen-Free

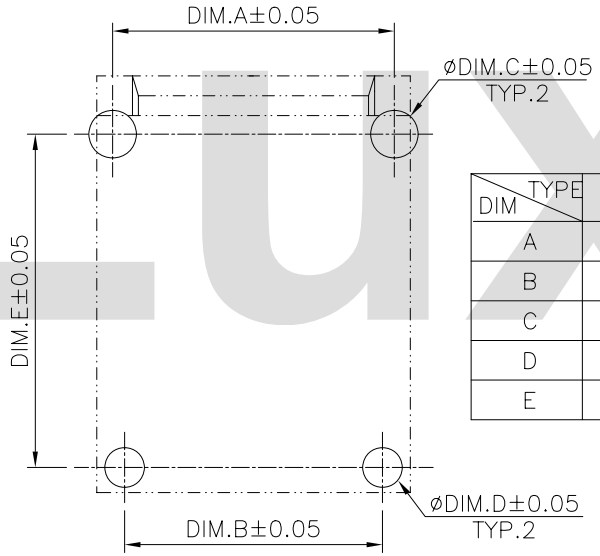

Recommmended P.C. Board Layout

DIM \ TYPE	TYPE 0	TYPE 1
A	7.10(.280)	6.50(.256)
B	6.50(.256)	6.50(.256)
C	1.20(.047)	1.00(.039)
D	1.00(.039)	0.80(.031)
E	8.40(.331)	9.50(.374)

Halogen-Free

Lead Free Process

RoHS Compliant

SYM	NAME	DATE	REVISIONS
4			
3			
2			
1			

CVILUX CORP. 2008.01.02 ISSUED

		DATE
DRAWN BY:	Eager	12/25-07'
ENGINEER:	Eisley	12/26-07'
CHECKED BY:	Alex	12/26-07'
APPROVED BY:	Alex	12/26-07'

UNIT: mm / inch

TOLERANCE UNLESS OTHERWISE SPECIFIED

.X ± 0.30/.012	X° ± 1°
.XX ± 0.20/.008	.X° ±
.XXX ± 0.10/.004	.XX° ±

TITLE: 3.5mm PITCH WIRE TO BOARD CONNECTOR

MATERIAL:

FINISH:

瀚荃股份有限公司
CviLux Corporation

DRAWING NO.	CP0530SA	PART NO.	CP0502P1HT*-NH
SCALE	5 / 1	SHEET 1 OF 1	

CviLux