THIS DRAWING IS UNPUBLISHED
RELEASED FOR PUBLICATION 2014
© COPYRIGHT 2013 BY TE CONNECTIVITY ALL RIGHTS RESERVED.

LOC	DIST

REVISIONS

P	LTR	DESCRIPTION	DATE	DWN	APVD
	B	REVISED PER E.O. A09207	01MAY1989		JA
	C	REVISED REDRAWN PER E.O. P19388	13OCT2006	AM	RDR
	C1	REVISED PER ECO-14-015729	16OCT2014	JA	DM
	C2	REVISED PER ECO-14-018705	12DEC2014	JA	DM

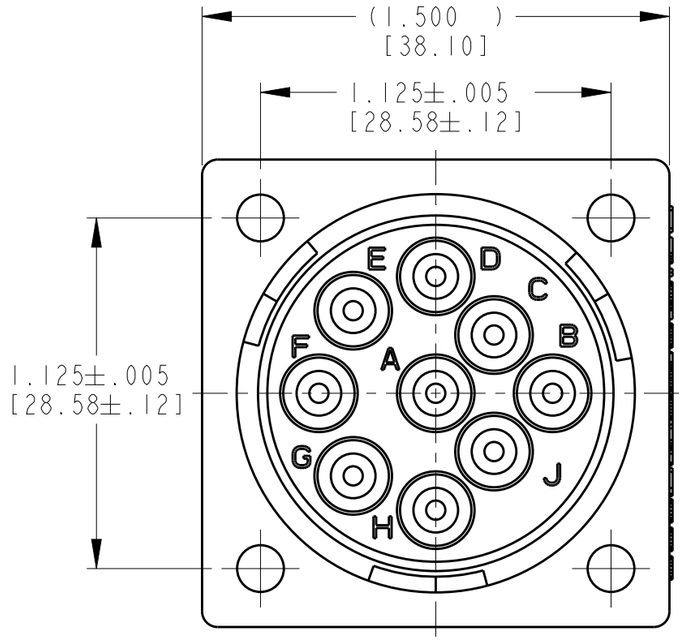

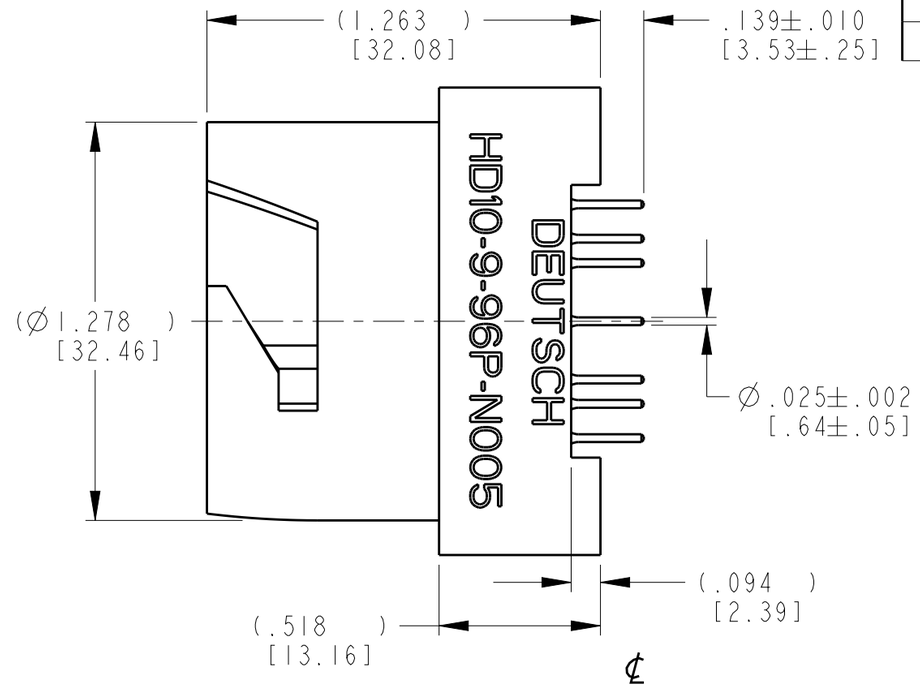

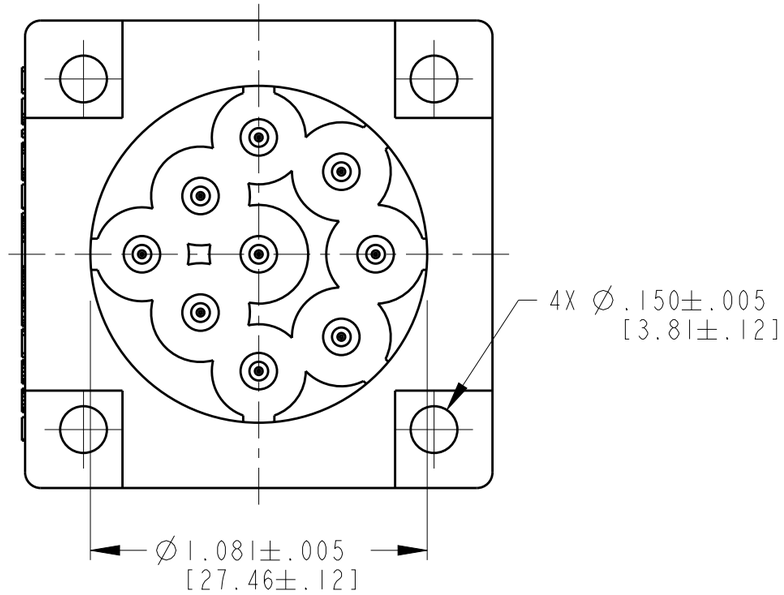

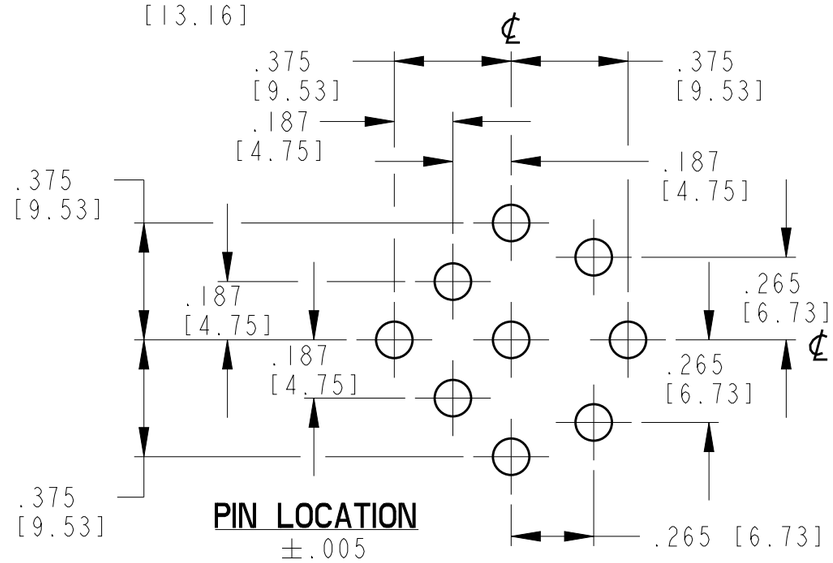

PIN LOCATION
±.005

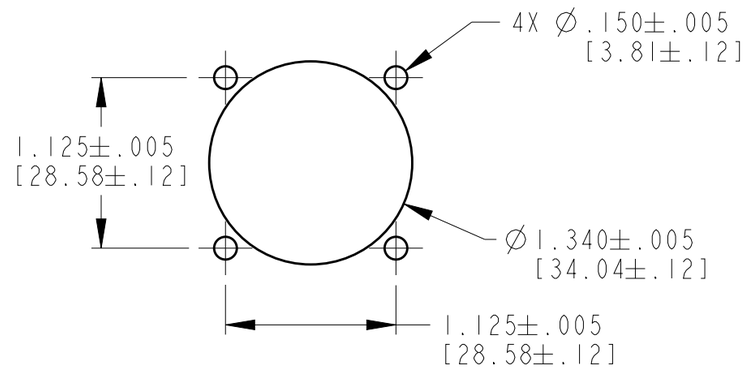

RECOMMENDED CUTOUT

3 CONTACT PLATING: MATING SIDE AND PCB SIDE: TIN (RoHS COMPLIANT) OVER COPPER.

2 HOUSING MATERIAL: PPS 40% GF (BLACK)

1. THIS RECEPTACLE MATES WITH HD16-9-96SX-XXXX (XXXX = ALL MODIFICATIONS) CONSULT FACTORY FOR MODIFICATIONS

NOTES:

THIS DRAWING IS A CONTROLLED DOCUMENT.

DIMENSIONS: INCHES[mm]

TOLERANCES UNLESS OTHERWISE SPECIFIED:
0 PLC ±
1 PLC ±
2 PLC ±
3 PLC ±
4 PLC ±
ANGLES ±

MATERIAL 2
FINISH 3

DWN T. SCARPETTA 02JUN1986
CHK JEFF ALBERS 21JUN1986
APVD JEFF ALBERS 21JUN1986
PRODUCT SPEC N/A
APPLICATION SPEC N/A
WEIGHT 41.12g

TE Connectivity

NAME RECEPTACLE, HEADER, FLANGE SHELL SIZE 9, 9 PIN, #16 SIZE HD10 SERIES

SIZE	CAGE CODE	DRAWING NO	RESTRICTED TO
A3	4AFU8	C-HD10-9-96P-N005	GEN

Customer Drawing | SCALE 2:1 | SHEET 1 OF 1 | REV C2

1470-19 (3/11)