6 SEAL TYPE	CONTACT SIZE	MIN. INSUL. OD [mm]	MAX. INSUL. OD [mm]	WIRE RANGE [mm^2] REF ONLY
NORMAL	16	.100 [2.540]	.134 [3.404]	14-20 AWG [2.0-.50]
E	16	.053 [1.346]	.120 [3.048]	14-20 AWG [2.0-.50]

REV	
D	DRC12-40PC*

REVISIONS

SYM	DESCRIPTION	DATE	APPROVED
A	REVISED PER E.O. P17701	4-4-02	R.D.R.
B	REVISED PER E.O. P18662	8-26-04	R.D.R.
C	REVISED PER E.O. P19093	11-4-05	R.D.R.
D	REVISED PER E.O. P21119	10-28-11	RDR

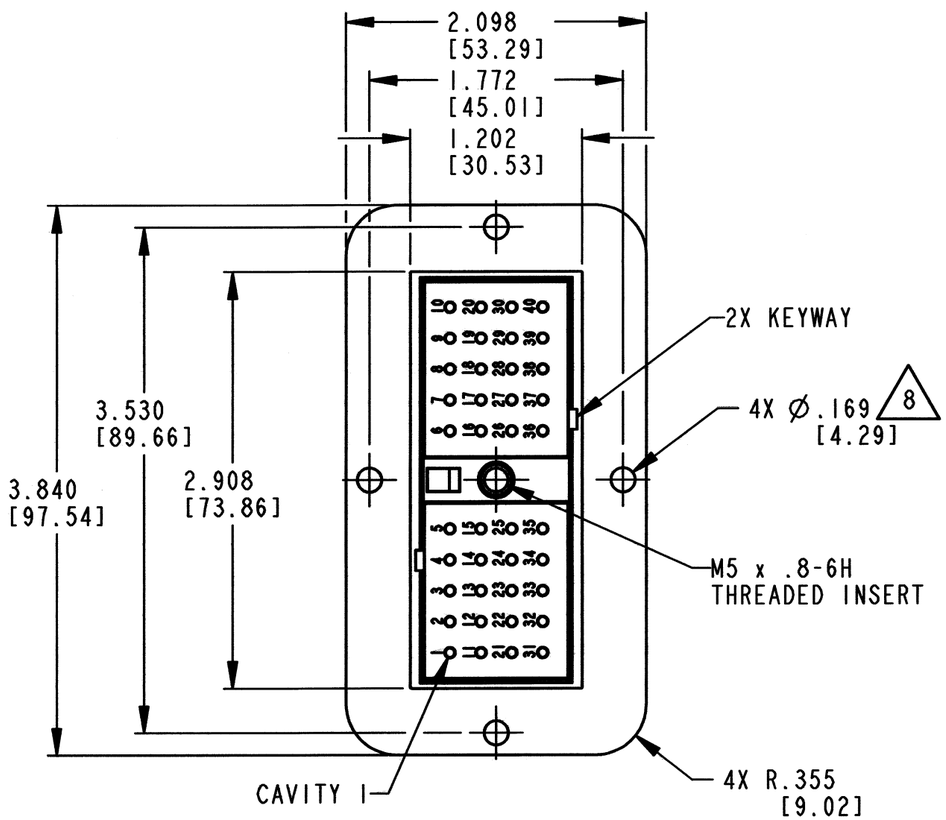

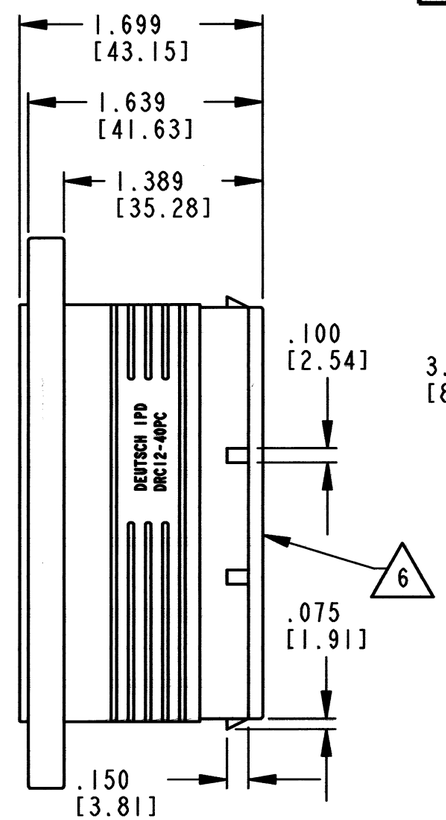

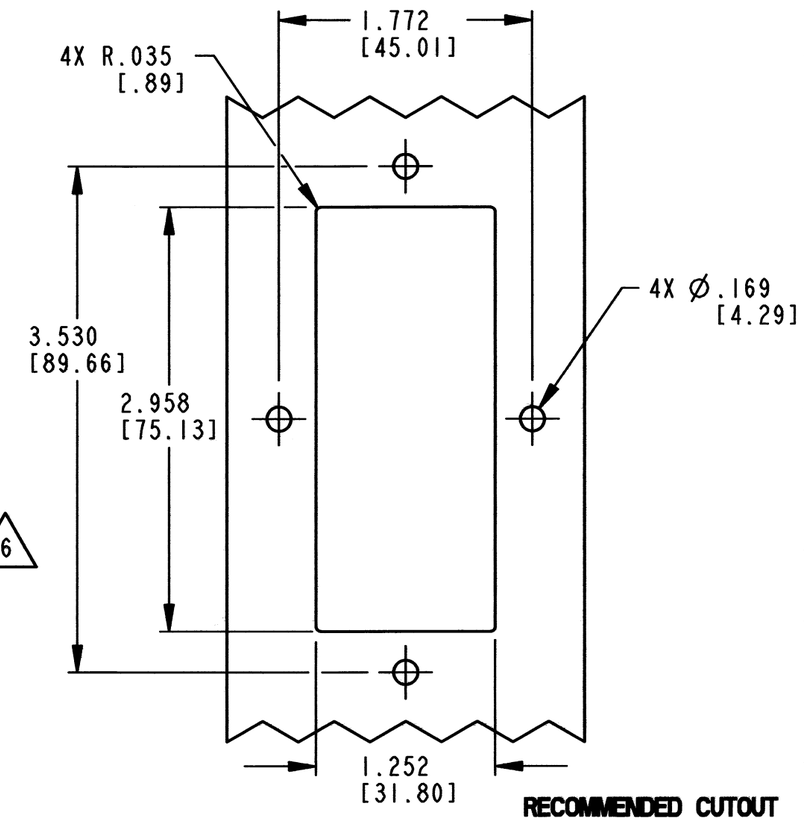

5. THIS RECEPTACLE MATES WITH DRC16-40S-****; DRC18-40SC-**** PLUGS. (****= ALL MODIFICATIONS) CONSULT FACTORY FOR MODS.

4. FOR CONTACT AND WIRE PERFORMANCE AND APPLICATION CHARACTERISTICS, SEE DRAWING 0425-015-0000.

3. RECEPTACLE IS SUPPLIED WITH DUST CAP (NOT SHOWN).

2. DIMENSION TOLERANCE: ±.025 [.635]; PANEL CUTOUT: ±.010 [.25].

1. DIMENSIONS ARE IN INCHES [mm].

NOTES:

8 RECOMMENDED SCREW: 8-32 [M4]. TORQUE: 20-25 IN-LB [2.26-2.82 Nm].

7 MATERIAL: HOUSING: PLASTIC; GROMMET: RUBBER; INSERT: STEEL.

6. WHEN * = E: BLUE STRIP ON WELD CAP IDENTIFIES "E" WIRE SEAL.

	SIGNATURE & DATE
DR	D. MEYER 08/09/99
CHK	D. Hasibuan 9/26/11
PE	D. Hasibuan 9/26/11
APPD	D Meyer 10/27/11
SCALE	NONE WT

RECEPTACLE, FLANGED
40 SIZE 16
DRC SERIES
KEY ARRANGEMENT -C-

ENVELOPE

EP — MATL. CODE

DEUTSCH INDUSTRIAL
3850 INDUSTRIAL AVE.
HEMET, CA 92545

B — DWG SIZE

DRC12-40PC*

CODE 11139 — SHEET 1 OF 1