REV	
A	0528-003-3805

REVISIONS

SYM	DESCRIPTION	DATE	APPROVED
NC	NEW RELEASE PER E.O. P17597	7-18-02	C.W.
A	REVISED PER E.O. P20487	4-23-10	ADL

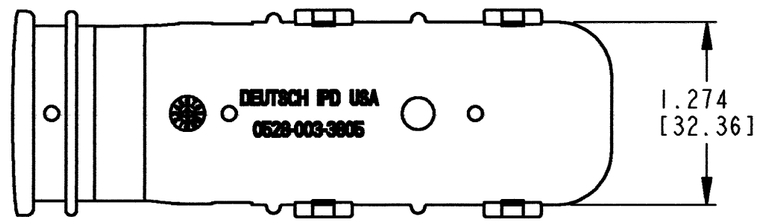

3D VIEW

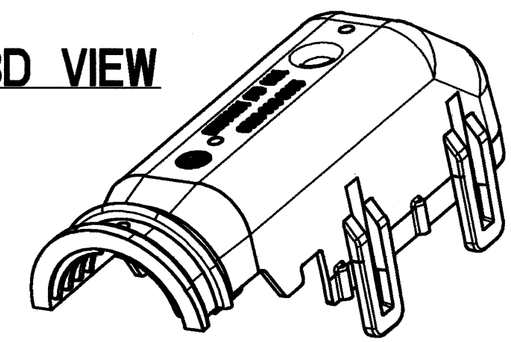

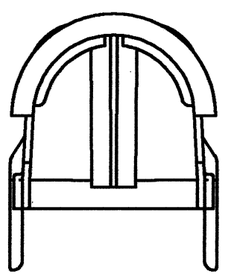

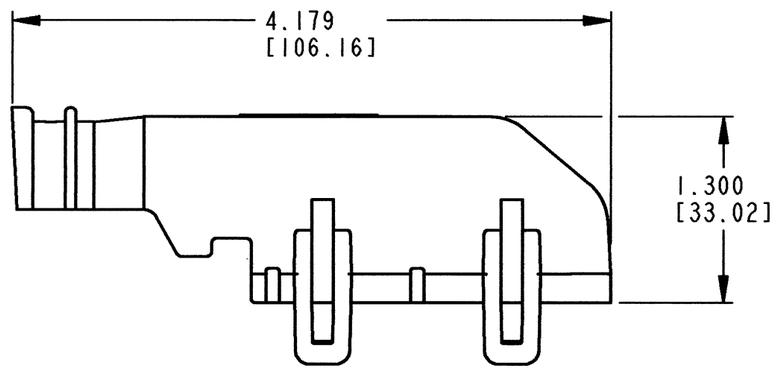

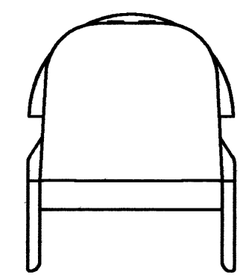

4. BACKSHELL MATERIAL: NYLON BLACK

3. THIS PART SNAPS ONTO DRC26-38S01-**** THRU DRC26-38S10-****
(**** = ALL CONFIGURATIONS) CONSULT FACTORY FOR MODS.

2. ALL DIMENSIONS TO HAVE A TOLERANCE OF ±.025 [.64].

1. ALL DIMENSIONS ARE IN INCHES [mm].

NOTES: UNLESS OTHERWISE SPECIFIED

	SIGNATURE & DATE
DR	J. APOSTOL 20APR2010
CHK	Paula Camal 4/21/2010
PE	Paula Camal 4/21/2010
APPD	D Meyer 4/21/10
SCALE NONE	WT ———

BACKSHELL FOR
38 PIN PLUG
DRC SERIES
COLOR: BLACK

ENVELOPE

EP | MATL. CODE

DEUTSCH INDUSTRIAL
3850 INDUSTRIAL AVE.
HEMET, CA 92545

B | 0528-003-3805

DWG SIZE | CODE 11139 | SHEET 1 OF 1