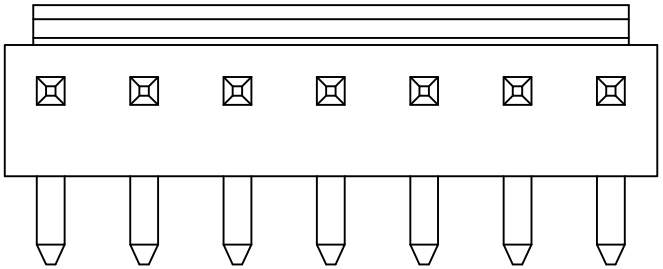

Notes:
* Insulation: Nylon 66 UL 94V-0
  Color Nature
* Contact: Brass
* For Tin-Lead Wave Flow Process

Ordering Code:

CI52 ** P 1 H 00
① ② ③ ④ ⑤ ⑥

① Series No.
② No. of Circuits:
③ P= Pin header
④ Plating: 1= 3.05μm(120μ") Min. Tin over 0.76μm(30μ") Nickel
⑤ Type: H= Right angle
⑥ Other option: 00= Standard

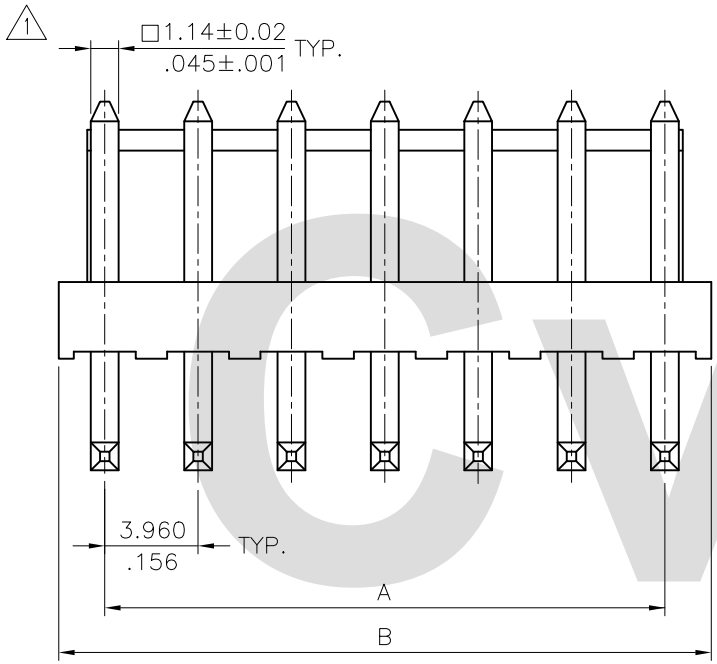

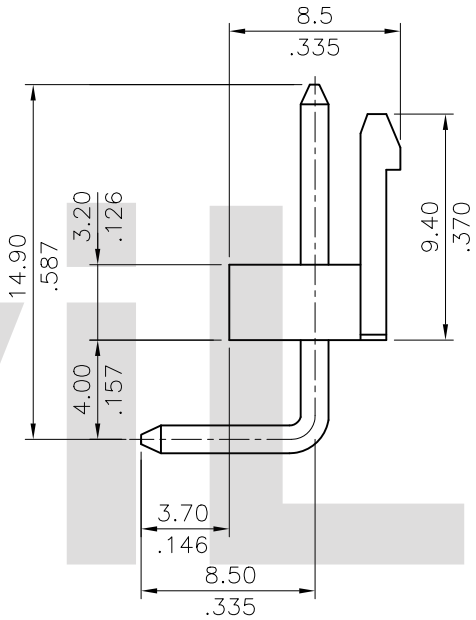

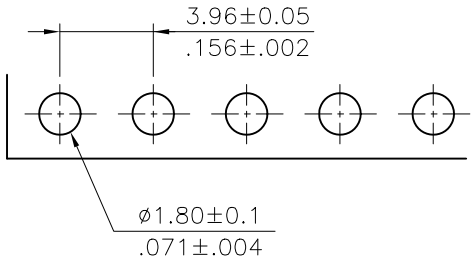

Recommended P.C. Board Layout

Circuits	Dimension	
	A	B
2	3.96(.156)	7.8(.307)
3	7.92(.312)	11.8(.465)
4	11.88(.468)	15.8(.622)
5	15.84(.624)	19.7(.776)
6	19.80(.780)	23.7(.933)
7	23.76(.936)	27.6(1.087)
8	27.72(1.091)	31.6(1.244)
9	31.68(1.247)	35.5(1.398)
10	35.64(1.403)	39.5(1.555)
11	39.60(1.559)	43.5(1.713)
12	43.56(1.715)	47.4(1.866)
13	47.52(1.871)	51.4(2.024)

2

Tin-Lead Process | RoHS Compliant

SYM	NAME	DATE	REVISIONS
4			
3			
2	Karen	4/29-14'	ECNT114029
1	Bill	1/30-08	ECN08053

CVILUX CORP 2014.05.09 ISSUED

		DATE
DRAWN BY:	Karen	4/30-14'
ENGINEER:	Sun	4/30-14'
CHECKED BY:	Eisley	4/30-14'
APPROVED BY:	David	4/30-14'

UNIT: mm / inch

TOLERANCE UNLESS OTHERWISE SPECIFIED

.X ± 0.38/.015	X.° ± 1°
.XX ± 0.25/.010	.X° ±
.XXX ± 0.10/.004	.XX° ±

TITLE: 3.96MM(.156") RIGHT ANGLE HEADERS

MATERIAL:

FINISH:

瀚荃股份有限公司
CviLux Corporation

DRAWING NO.	CI5203SE	PART NO.	CI52**P1H00
SCALE	3 / 1	SHEET 1 OF 1	

CVILUX