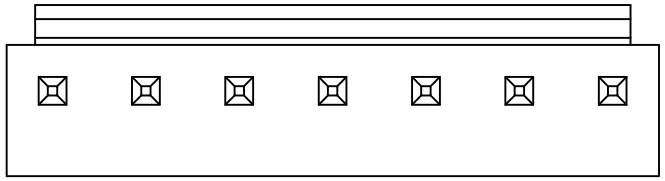

Notes:
* Insulation: Nylon 66 UL 94V-0 Color Nature
* Contact: Brass
* For Tin-Lead Wave Flow Process

Ordering Code:

CI52 ** P 1 V 00
① ② ③ ④ ⑤ ⑥

① Series No.
② No. of Circuits:
③ P= Pin header
△1 ④ Plating: 1= 3.05μm(120μ") Min. Tin over 0.76μm(30μ") Nickel
2= Gold flash plated over 1.27μm(50μ") Nickel
3= 0.38μm(15μ") Gold plated over 1.27μm(50μ") Nickel
4= 0.76μm(30μ") Gold plated over 1.27μm(50μ") Nickel
⑤ Type: V= Straight
⑥ Other option: 00= Standard

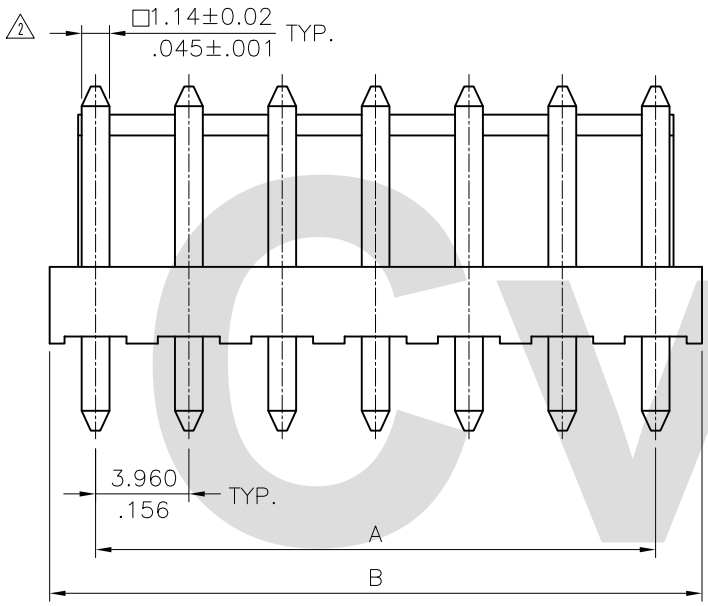

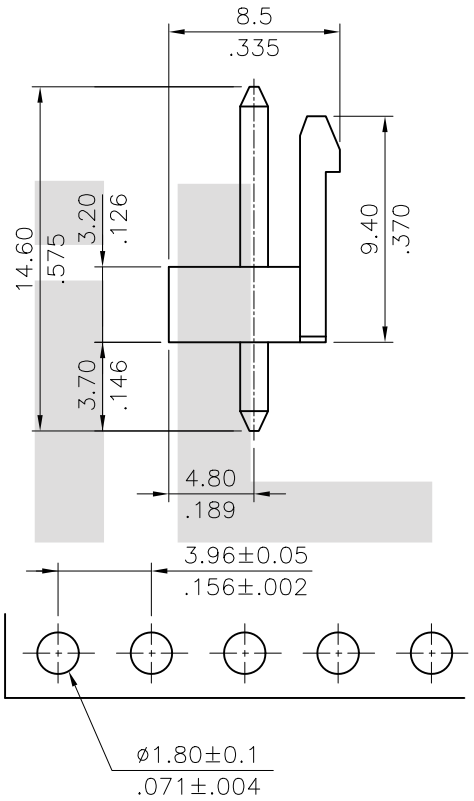

Recommended P.C. Board Layout

Circuits	Dimension A	Dimension B
2	3.96(.156)	7.8(.307)
3	7.92(.312)	11.8(.465)
4	11.88(.468)	15.8(.622)
5	15.84(.624)	19.7(.776)
6	19.80(.780)	23.7(.933)
7	23.76(.936)	27.6(1.087)
8	27.72(1.091)	31.6(1.244)
9	31.68(1.247)	35.5(1.398)
10	35.64(1.403)	39.5(1.555)
11	39.60(1.559)	43.5(1.713)
12	43.56(1.715)	47.4(1.866)
△3 13	47.52(1.871)	51.4(2.024)

Tin-Lead Process

RoHS Compliant

SYM	NAME	DATE	REVISIONS
△4			
△3	Karen	4/29-14'	ECNT114029
△2	Bill	01/30-08'	ECN08053
△1	SUN	9/03/03'	ECN03278

CVILUX CORP 2014.05.09 ISSUED

		DATE
DRAWN BY:	Karen	4/30-14'
ENGINEER:	Sun	4/30-14'
CHECKED BY:	Eisley	4/30-14'
APPROVED BY:	David	4/30-14'

UNIT: mm / inch

TOLERANCE UNLESS OTHERWISE SPECIFIED

.X ± 0.38/.015	X.° ± 1°
.XX ± 0.25/.010	.X° ±
.XXX ± 0.10/.004	.XX° ±

TITLE: 3.96MM(.156") STRAIGHT HEADERS

MATERIAL:

FINISH:

瀚荃股份有限公司
CviLux Corporation

DRAWING NO.	CI5202SF	PART NO.	CI52**P*V00
SCALE	3 / 1	SHEET 1 OF 1	