Material:
* Insulation: Nylon 66 UL 94V-0
  Color Nature
* Contact: Brass

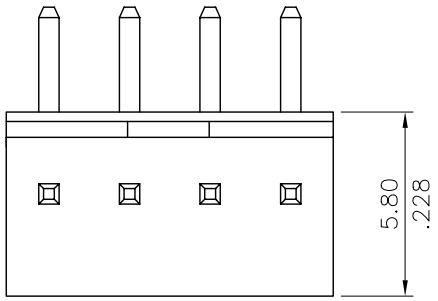

Ordering Code:

CI35 04 P 1 H 00
① ② ③ ④ ⑤ ⑥

① Series No.
② No. of Circuits:
③ P= Pin header
④ Plating: 1= 3.05μm(120μ") Min. Tin over 0.76μm(30μ") Nickel
⑤ Type:H= Right angle
⑥ Other option: 00= Standard

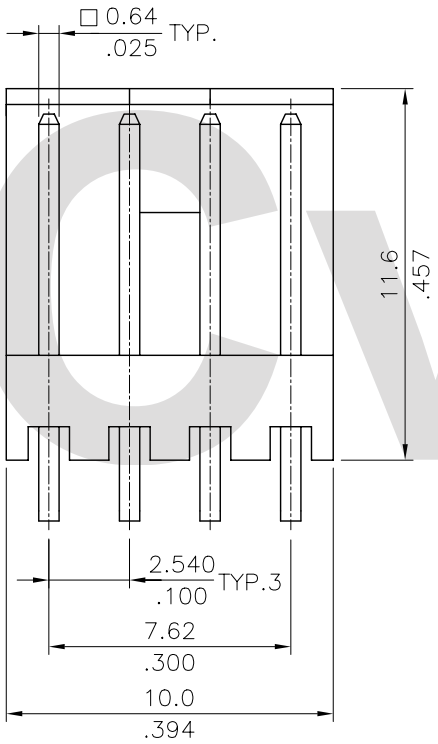

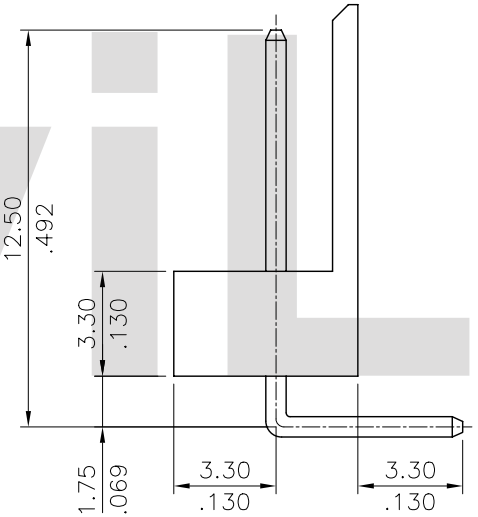

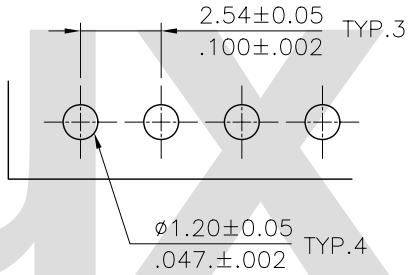

Recommended P.C. Board Layout

RoHS Compliant

SYM	NAME	DATE	REVISIONS
4			
3			
2			
1	Bill	08/16'07	ECR07096-0/ECN07320

CVILUX CORP. 2007.08.28 ISSUED

		DATE
DRAWN BY:	Bill	8/20-07'
ENGINEER:	Eisley	8/20-07'
CHECKED BY:	David	8/20-07'
APPROVED BY:	Alex	8/20-07'

UNIT: mm / inch

TOLERANCE UNLESS OTHERWISE SPECIFIED

.X ± 0.30 / .012	X.° ± 1°
.XX ± 0.20 / .008	.X° ±
.XXX ± 0.10 / .004	.XX° ±

TITLE: 2.54MM(.100") RIGHT ANGLE HEADER

MATERIAL:

FINISH:

瀚荃股份有限公司
CviLux Corporation

DRAWING NO.	CI3503SB	PART NO.	CI3504P1H00
SCALE	4 / 1	SHEET 1 OF 1	