Wire Range	Insulation Diameter	Reel Q'ty
AWG #22~#28	1.50 (.059) MAX.	10,000 PCS.

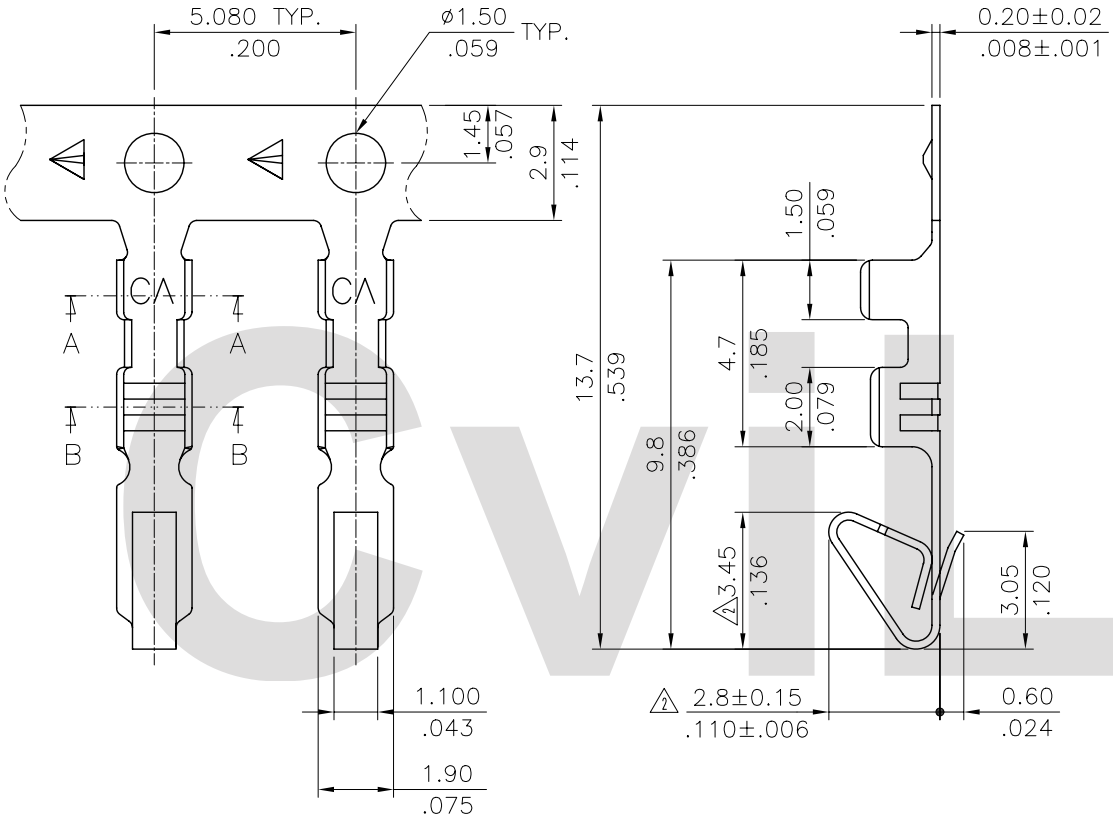

Ordering Code

CI31 T02 * * E 0
① ② ③ ④ ⑤ ⑥

① Series No.
② Type: T02= AWG #22 ~ #28
③ Plating: 1= 2.03μm(80μ") Min. Tin over 0.76μm(30μ") Nickel
A= Selective Gold Flash Plated over 1.27 μm(50μ")Nickel
④ Material: B= Brass
P= Phosphor Bronze
⑤ Plating method: E= Pre-tinned
⑥ Option: 0= Standard

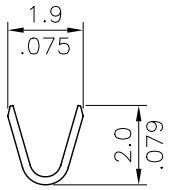

SEC: A–A

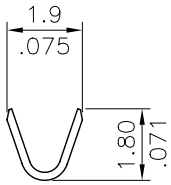

SEC: B–B

RoHS Compliant

SYM	NAME	DATE	REVISIONS
4			
3			
2	EDDY	10/23/03'	ECN03367, ECR03013-1
1	JASON	09/08/03'	ECN03275, ECR03018-0

CVILUX.CORP 2003.10.27 ISSUED

		DATE
DRAWN BY:	Eddy	10/24-03'
ENGINEER:	Eisley	10/27-03'
CHECKED BY:	David	10/27-03'
APPROVED BY:	Alex	10/27-03'

UNIT: mm / inch

TOLERANCE UNLESS OTHERWISE SPECIFIED

.X ± 0.20/.008	X.° ± 1°
.XX ± 0.10/.004	.X° ±
.XXX ± 0.05/.002	.XX° ±

TITLE: 2.54MM(.100") CRIMP TERMINAL

MATERIAL:

FINISH:

瀚荃股份有限公司
CviLux Corporation

DRAWING NO.	CI3105SH	PART NO.	CI31T02**E0
SCALE	5 / 1	SHEET 1 OF 1	