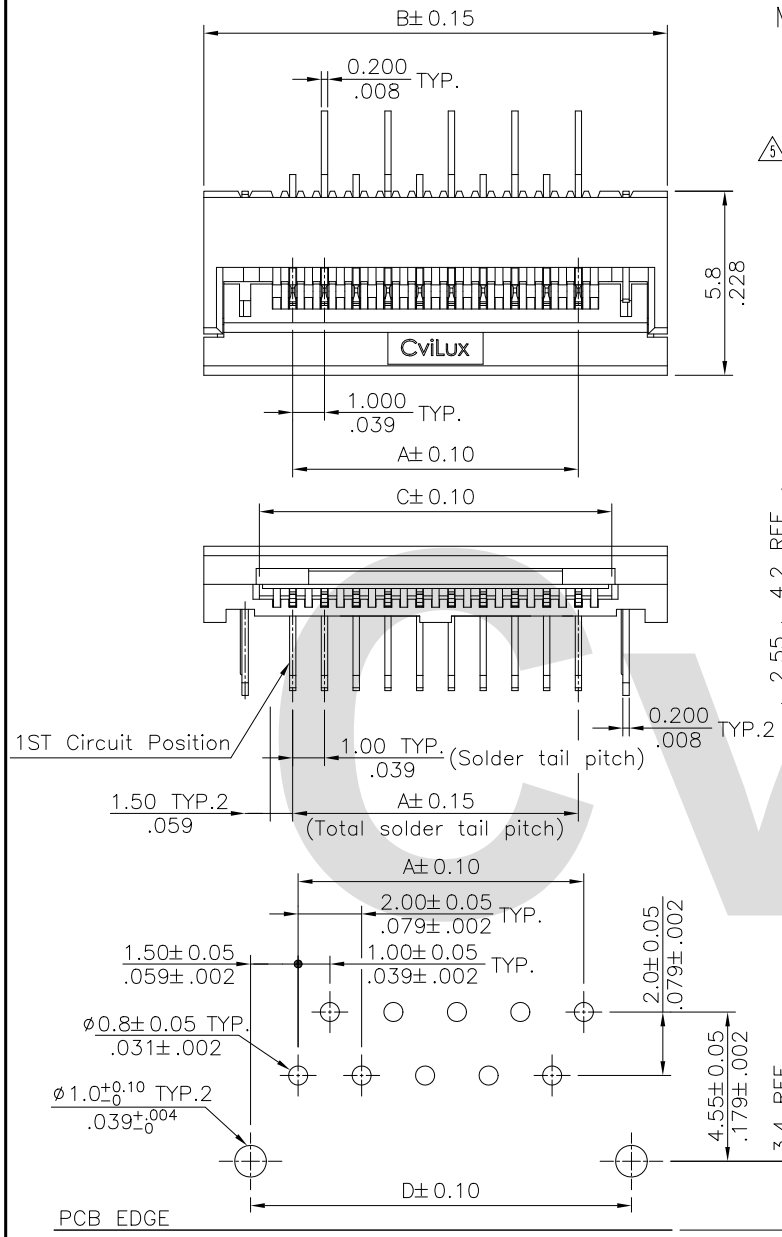

Recommended P.C. Board Layout

Material :

* Body : High temperature plastic UL 94V-0, Color Nature(Ivory)
* Slider : High temperature plastic UL 94V-0, Color Black
* Contact : Phosphor Bronze
* Fixed tab : Brass with Matte Tin Plated

A = 1.00 x No. of Spaces
B = A + 5.6
C = A + 2.1
D = A + 3.0
* Available in 4 through 32 circuits

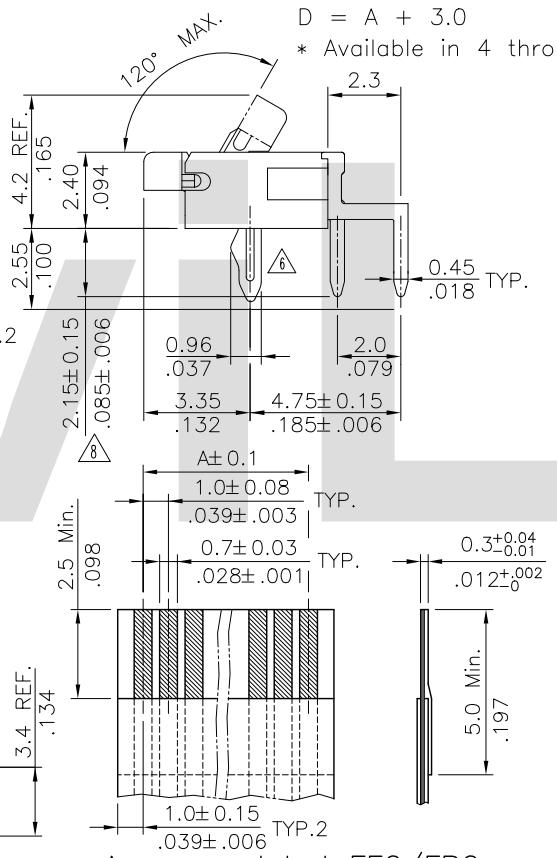

Accommodated FFC/FPC

Ordering Code

CF25 30 2 H 0 T0 - 10
① ② ③ ④ ⑤ ⑥ ⑦

① Series No.
② No. of Circuits
③ Plating code:
1= Matte Tin plated over Nickel
2= Gold flash over 50μ"min. Nickel
④ Contact style:
H= Side Entry DIP Type (Downside Contact)
⑤ Color: 0= Nature
⑥ Other option: T0= Tube Packing
⑦ Pitch: 10= 1.00 mm

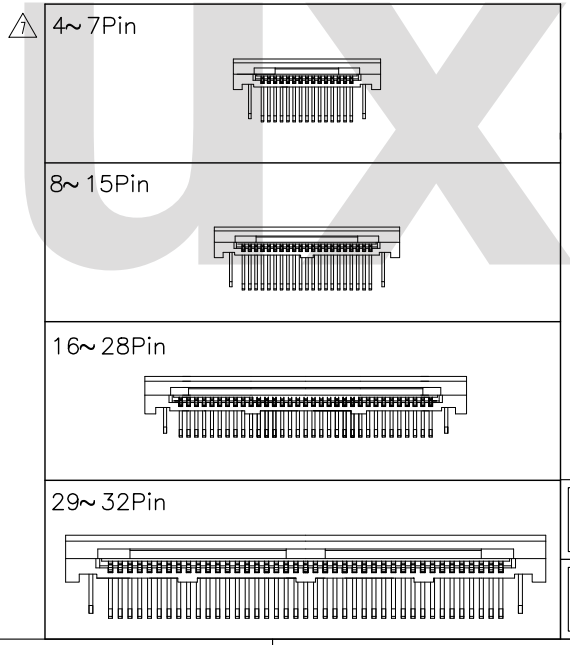

Lead Free Process

RoHS Compliant

SYM	NAME	DATE	REVISIONS
8	Karen	7/19-13'	ECNT113016
7	Enya	1/9-13'	ECN13005-0
6	Sun	6/03-11'	ECN11105/ECR11021-1
5	Sandy	2/18-09'	ECN09066/ECR08098-0

CVILUX CORP 2013.07.30 ISSUED

		DATE
DRAWN BY:	Karen	7/19-13'
ENGINEER:	Eisley	7/19-13'
CHECKED BY:	Eisley	7/19-13'
APPROVED BY:	David	7/19-13'

UNIT: mm / inch

TOLERANCE UNLESS OTHERWISE SPECIFIED

.X ± 0.15/.006	X.° ± 1°
.XX ± 0.10/.004	.X° ±
.XXX ± 0.05/.002	.XX° ±

TITLE: 1.00mm(.039") ZIF FFC/FPC ONE-TOUCH CONNECTOR

MATERIAL:

FINISH:

瀚荃股份有限公司
CviLux Corporation

DRAWING NO.	CF2504SJ	PART NO.	CF25***H0*0-10
SCALE	4 / 1	SHEET 1 OF 1	