Material:

* Hood: ABS UL 94HB , With Nickel plated
* Screw: Steel with Nickel plated
* Cable Clipper: Steel with Nickel plated

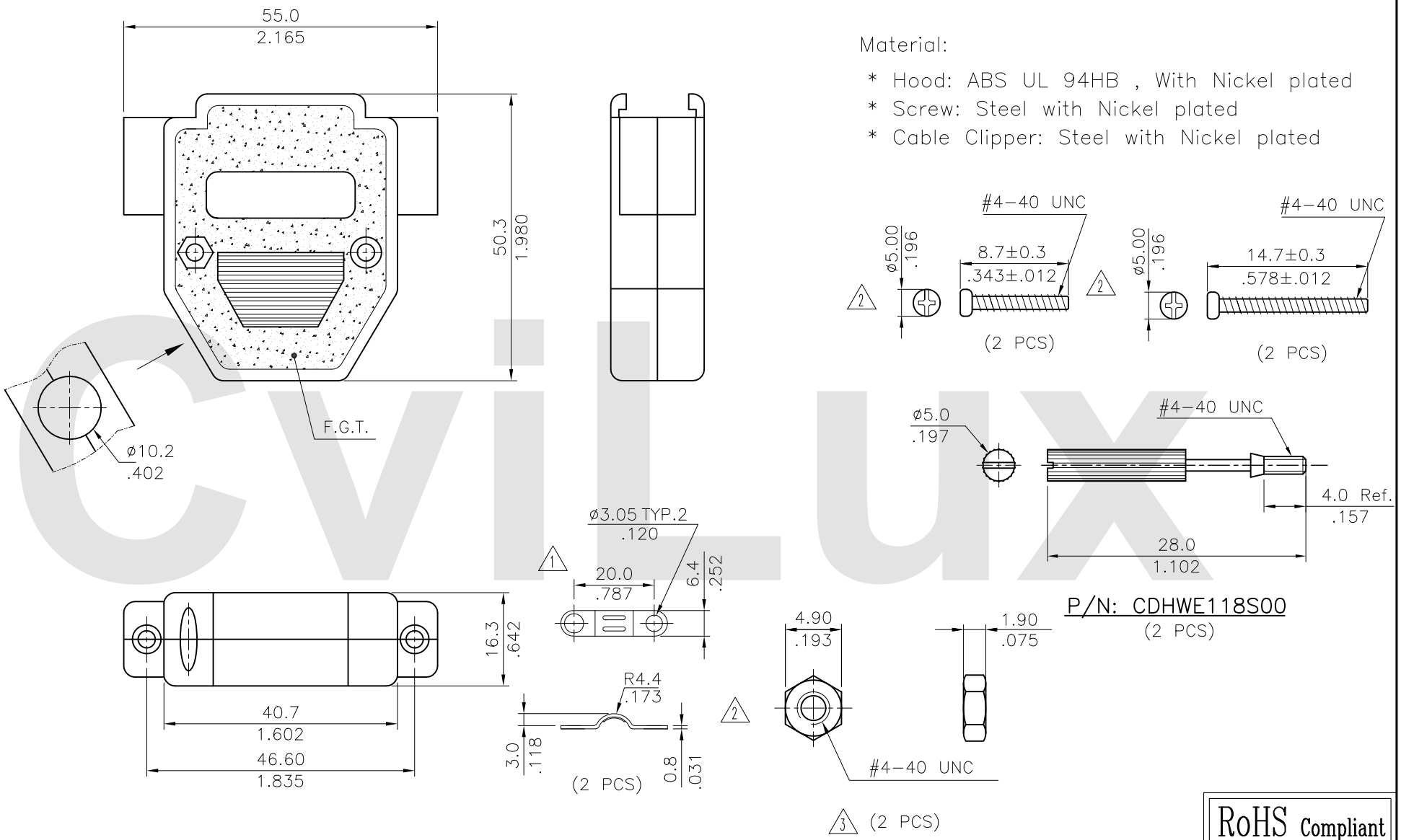

RoHS Compliant

SYM	NAME	DATE	REVISIONS
4			
3	Karen	5/18-16'	ECNT116097/ECRT116014
2	Bill	12/07/07'	ECN07499/ECR07132-0
1	Bill	09/11/07	ECR07112-0/ECN07373

CVILUX CORP 2016.05.26 ISSUED

		DATE
DRAWN BY:	Karen	5/18-16'
ENGINEER:	Sun	5/18-16'
CHECKED BY:	Eisley	5/20-16'
APPROVED BY:	Eisley	5/20-16'

UNIT: mm / inch

TOLERANCE UNLESS OTHERWISE SPECIFIED

.X ± 0.38/.015	X.° ± 1°
.XX ± 0.25/.010	.X° ±
.XXX ±	.XX° ±

TITLE: D-SUB CONNECTTOR ACCESSORIES (PLASTIC HOOD & ACCESSORY SCREW)

MATERIAL:

FINISH:

瀚荃股份有限公司
CviLux Corporation

DRAWING NO.	CD4602SF	PART NO.	CD4625H0M00
SCALE	1 / 1	SHEET 1 OF 1	