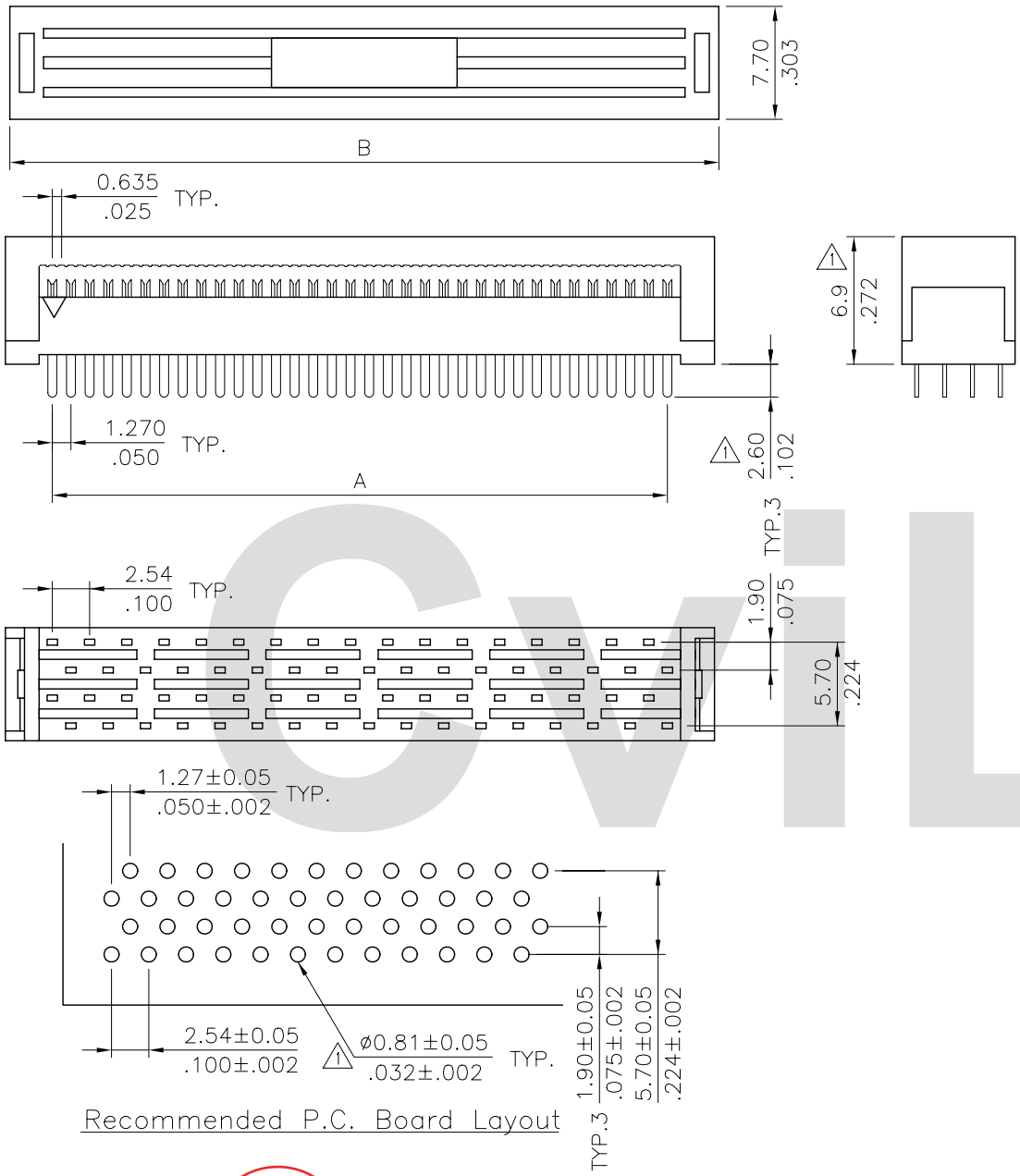

Recommended P.C. Board Layout

Material:

* Insulation: Glass filled PBT UL 94V-0
* Contact: Phosphor Bronze

Ordering Code:

CA05	**	P	1	1	00
①	②	③	④	⑤	⑥

① Series No.
② No. of Circuits:
30P,50P,68P,80P,100P (X1=100P)
③ Contact type: P=Plug
④ Plating option :
1 = Tin over Nickel
⑤ Color: 1= Black
⑥ Option: 00= Standard

△1

Circuits	Dimension	
	A	B
10	5.08(.200)	12.63(.497)
20	11.43(.450)	18.98(.747)
26	15.24(.600)	22.79(.897)
30	17.78(.700)	25.33(.997)
34	20.32(.800)	27.87(1.097)
40	24.13(.950)	31.68(1.247)
50	30.48(1.200)	38.03(1.497)
68	41.91(1.650)	49.46(1.947)
80	49.53(1.950)	57.08(2.247)
100	62.23(2.450)	69.78(2.747)

RoHS Compliant

CviLux

SYM	NAME	DATE	REVISIONS
4			
3			
2			
1	Jim	7/27/06'	ECR06053-0/ECN06233

CVILUX CORP.
2006.08.01
ISSUED

		DATE
DRAWN BY:	Jim	7/27/06'
ENGINEER:	Eisley	7/27/06'
CHECKED BY:	David	7/28/06'
APPROVED BY:	Alex	7/28/06'

UNIT: mm / inch

TOLERANCE UNLESS OTHERWISE SPECIFIED

.X ± 0.30 / .012	X.° ± 1°
.XX ± 0.20 / .008	.X° ±
.XXX ± 0.10 / .004	.XX° ±

TITLE: 1.27MM(.050") RIBBON CABLE IDC DIP PLUG

MATERIAL:

FINISH:

瀚荃股份有限公司
CviLux Corporation

DRAWING NO.	CA0501SE	PART NO.	CA05**P1100
SCALE	2 / 1	SHEET 1 OF 1	