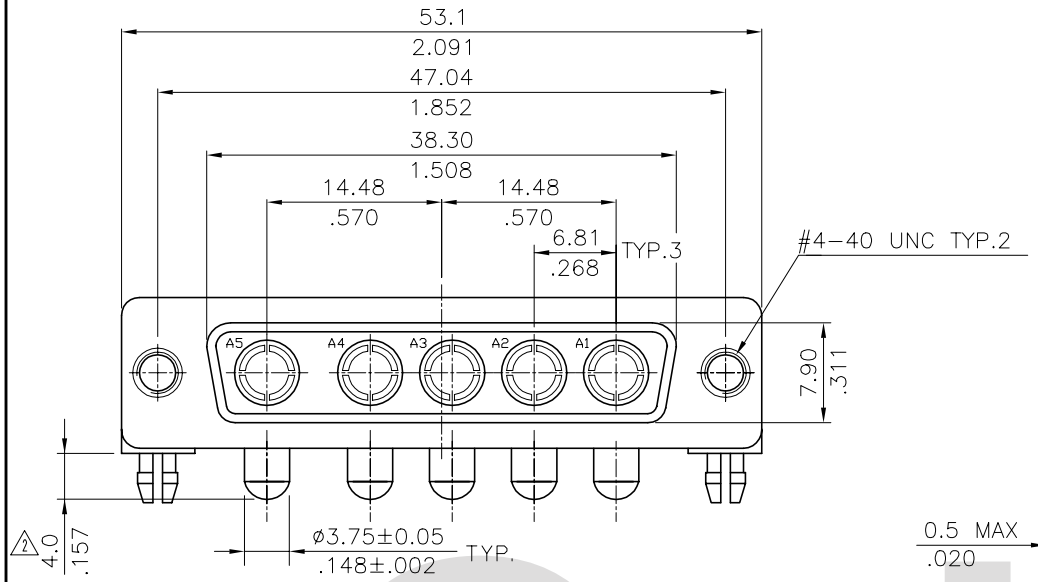

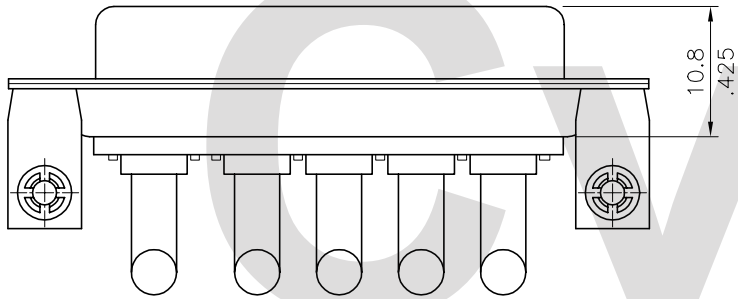

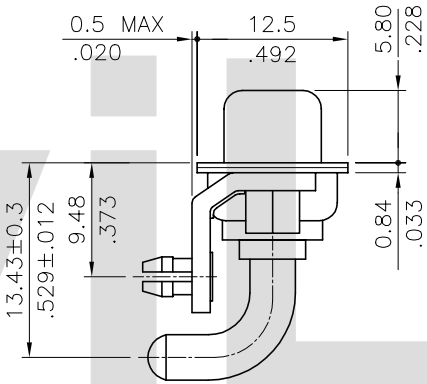

Materail: Insulator: Glass filled Polyester UL 94V-0
Shell: Steel, Tin plated as standard
High power Contact : Brass with Gold plated

Ordering Code

C5W5	S	P	H	3	0	1	40	I10
①	②	③	④	⑤	⑥	⑦	⑧	⑨

① Series No.
② Connector Type: S= Receptacle
③ Contact type: P= High Power Contact
④ Contact tail style: H= Right Angle Dip type
⑤ High power contact plating:
2= Gold flash plated over Nickel
3= 15μ" Gold plated over Nickel
4= 30μ" Gold plated over Nickel
5= 50μ" Gold plated over Nickel
⑥ Singal contact plating:
0= Without singal contact
⑦ Insulator color: 1= Black, 6= Green
⑧ Performance: 40= 40A
⑨ Mounting Style:
000= With ø3.05mm holes on shell
B00= Riveted #4-40 UNC open nuts on front shell
C00= Riveted #4-40 UNC open nuts on rear shell
I00= Riveted #4-40 UNC ground tabs with ø3.2mm holes
I10= Riveted #4-40 UNC ground tabs with board locks(standard)

RoHS Compliant

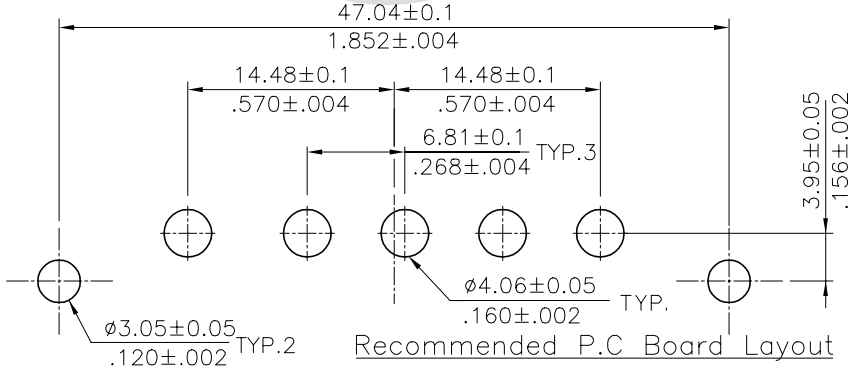

Recommended P.C Board Layout

Mounting Style

Code	000	Code	B00	Code	C00	Code	I00	Code	I10
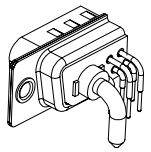		DIM. L= 4.0mm 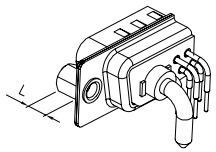		DIM. L= 4.0mm 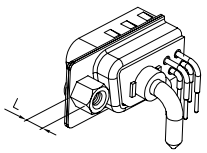		ØA=3.2mm 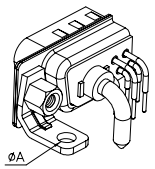		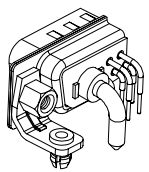	

SYM	NAME	DATE	REVISIONS
4			
3			
2	Jim	10/13/06'	ECR06094-0/ECN06369
1	SUN	3/24/05'	ECR05025-0/ECN05095

CVILUX CORP. 2006.10.24 ISSUED

		DATE
DRAWN BY:	Jim	10/14/ 06'
ENGINEER:	Eisley	10/17/ 06'
CHECKED BY:	David	10/17/ 06'
APPROVED BY:	Alex	10/17/ 06'

UNIT: mm / inch

TOLERANCE UNLESS OTHERWISE SPECIFIED

.X ± 0.30/.012	X.° ± 1°
.XX ± 0.20/.008	.X° ±
.XXX ± 0.10/.004	.XX° ±

TITLE: C5W5 40A HIGH POWER FEMALE D-SUB CONNECTOR (RIGHT ANGLE BOARD MOUNT TYPE)

MATERIAL:

FINISH:

瀚荃股份有限公司
CviLux Corporation

DRAWING NO.	C5W514SD	PART NO.	C5W5SPH*0*40***
SCALE	2 / 1	SHEET 1 OF 1	