Ordering Code:

CI31 ** P 1 V 00 - NH
① ② ③ ④ ⑤ ⑥ ⑦

Material:
* Insulation: High temperature plastic UL 94V-0
* Contact: Brass

① Series No.
② No. of Circuits
③ Contact type: P= Pin header
△2 ④ Plating option:
1= 3.05μm(120μ") Min. Matte Tin plated over 0.76μm (30μ") Nickel

⑤ Tail Style: V= Vertical
⑥ Option: 00= Standard
⑦ NH= Halogen-Free

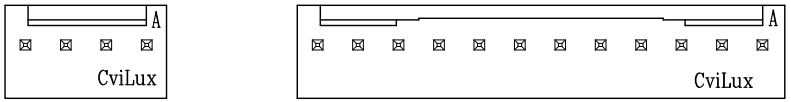

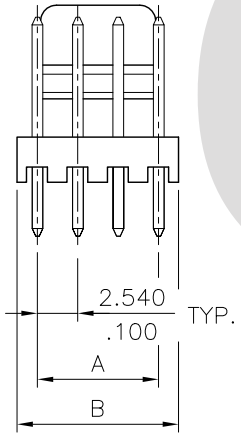

(2 through 5 circuits)

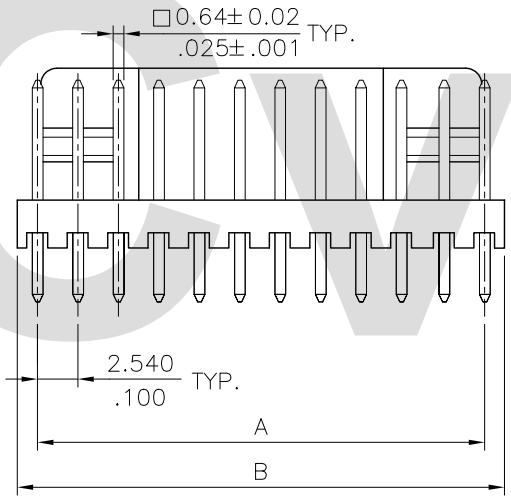

(6 through 20 circuits)

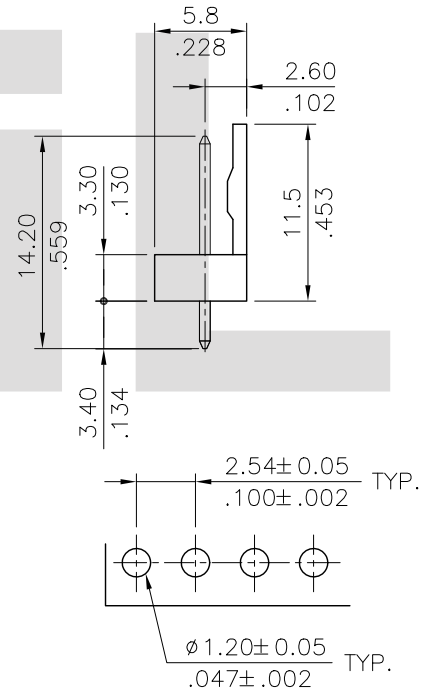

Recommended P.C. Board Layout

Circuits	Dimension A	Dimension B
2	2.54±0.2(.100±.008)	5.08±0.2(.200±.008)
3	5.08±0.2(.200±.008)	7.62±0.2(.300±.008)
4	7.62±0.2(.300±.008)	10.16±0.2(.400±.008)
5	10.16±0.3(.400±.012)	12.70±0.3(.500±.012)
6	12.70±0.3(.500±.012)	15.24±0.3(.600±.012)
7	15.24±0.3(.600±.012)	17.78±0.3(.700±.012)
8	17.78±0.3(.700±.012)	20.32±0.4(.800±.016)
9	20.32±0.4(.800±.016)	22.86±0.4(.900±.016)
10	22.86±0.4(.900±.016)	25.40±0.4(1.000±.016)
11	25.40±0.4(1.000±.016)	27.94±0.4(1.100±.016)
12	27.94±0.4(1.100±.016)	30.48±0.4(1.200±.016)
13	30.48±0.4(1.200±.016)	33.02±0.4(1.300±.016)
14	33.02±0.4(1.300±.016)	35.56±0.4(1.400±.016)
15	35.56±0.4(1.400±.016)	38.10±0.4(1.500±.016)
16	38.10±0.4(1.500±.016)	40.64±0.4(1.600±.016)
17	40.64±0.4(1.600±.016)	43.18±0.4(1.700±.016)
18	43.18±0.4(1.700±.016)	45.72±0.4(1.800±.016)
19	45.72±0.4(1.800±.016)	48.26±0.4(1.900±.016)
20	48.26±0.4(1.900±.016)	50.80±0.4(2.000±.016)

Halogen-Free | RoHS Compliant

SYM	NAME	DATE	REVISIONS
△4			
△3			
△2	Enya	7/15-13'	ECNT113012
△1	Tim	7/07-10"	ECN10243

CVILUX CORP 2013.07.30 ISSUED

		DATE
DRAWN BY:	Enya	7/16-13'
ENGINEER:	Eisley	7/23-13'
CHECKED BY:	Eisley	7/23-13'
APPROVED BY:	David	7/23-13'

UNIT: mm / inch

TOLERANCE UNLESS OTHERWISE SPECIFIED

.X ± 0.30/.012	X° ± 1°
.XX ± 0.20/.008	.X° ±
.XXX ± 0.10/.004	.XX° ±

TITLE: 2.54MM(.100") STRAIGHT HEADERS

MATERIAL:

FINISH:

瀚荃股份有限公司
CviLux Corporation

DRAWING NO.	CI3165SB	PART NO.	CI31**P1V00-NH
SCALE	2 / 1	SHEET 1 OF 1	