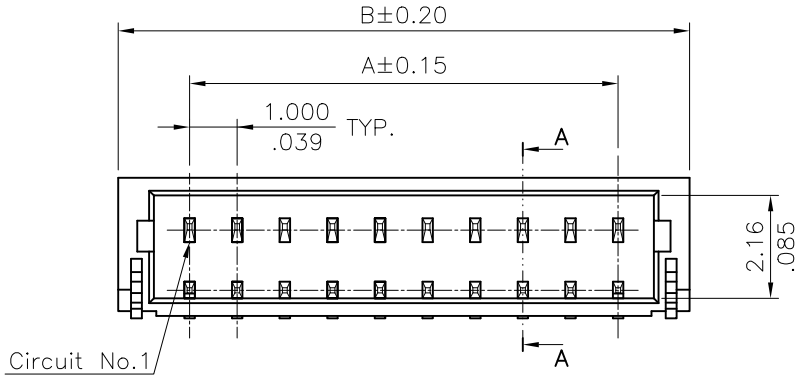

Notes:

* Base: Nylon 6T + 30% G.F UL 94V-0 ,Color Nature
* Contact: Phosphor Bronze
* Tab: Brass, with Matte Tin plated
* For Lead Free IR Reflow Process

ORDERING CODE

CI11 ** M 1 H R0 -LF
① ② ③ ④ ⑤ ⑥ ⑦

① Series No.
② Contacts:
③ M= SMT type header
④ Plating:
1= 100μ" Min. Matte Tin Plated over 50μ" Nickel
2= Gold flash plated over 1.27μm(50μ") Nickel
⑤ Type: H= Right angle
⑥ Option: R0= Tape & reel packing (Without pick & place pad) (Standard)
T0= Tube packing (Without pick & place pad)
⑦ LF= For Lead Free IR Processes

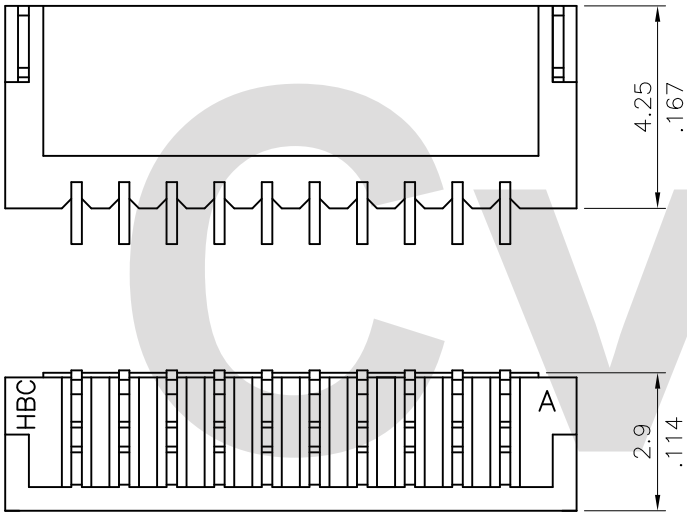

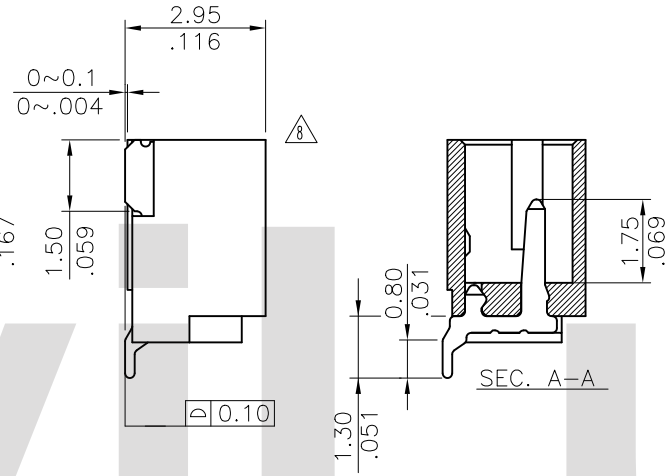

DIM. A = 1.00 x NO. OF SPACES
DIM. B = DIM. A + 3.0
12 * AVAILABLE IN 2 THROUGH 18,20,24 AND 26 CIRCUITS

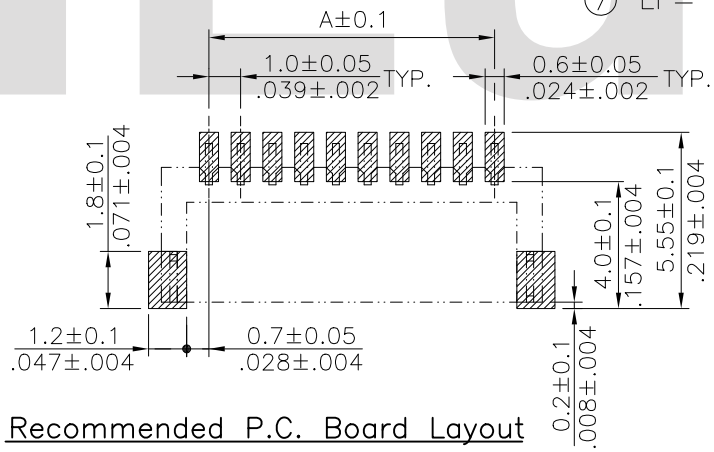

Recommended P.C. Board Layout

Lead Free Process

RoHS Compliant

SYM	NAME	DATE	REVISIONS
12	Sun	1/28-14'	ECNT114016
11	Enya	11/11-13'	ECNT113103/ECRB113027
11	Sun	7/05-11'	ECR10039-2/ECN11060
10	Hank	2/25-09'	ECR09013-0/ECN09078

CVILUX CORP 2014.02.14 ISSUED

		DATE
DRAWN BY:	Sun	1/28-14'
ENGINEER:	Eisley	1/29-14'
CHECKED BY:	Eisley	1/29-14'
APPROVED BY:	David	1/29-14'

UNIT: mm / inch

TOLERANCE UNLESS OTHERWISE SPECIFIED

.X ± 0.30/.012	X° ± 1°
.XX ± 0.20/.008	.X° ±
.XXX ± 0.10/.004	.XX° ±

TITLE: 1.00MM(.079") WIRE TO BOARD CONNECTOR

MATERIAL:

FINISH:

瀚荃股份有限公司
CviLux Corporation

DRAWING NO.	CI1112SN	PART NO.	CI11**M*H*0-LF
SCALE	6 / 1	SHEET	1 OF 2

NOTE :

11 * Reel Material : Corrugated Paper
* Carrier Material : Clear, Conductive Polystyrene Alloy
* Cover Tape Material : Polyester
* Cover Tape Peel Strength : 0.1N – 1.3N
* Carrier camber is within 1mm in 100mm
* All dimensions meet EIA–481–2 & EIA–481–3 requirements.
* Quantity : 1500 PCS/Reel

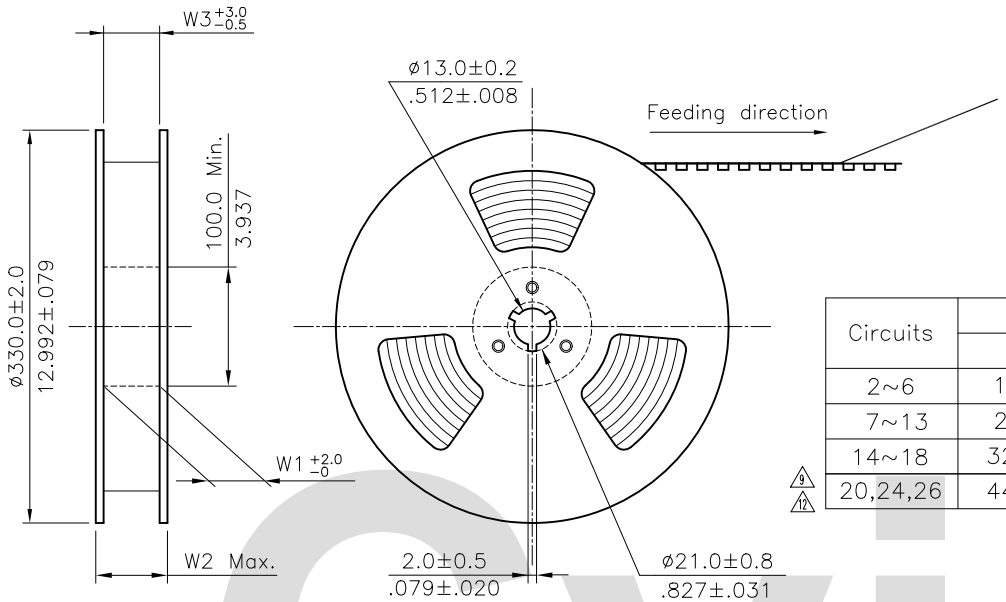

Circuits	Dimension					Packing (Reel/Caton)
	E	F	W1	W2	W3	
2~6	16.0(.630)	–	16.5(.650)	22.5(.886)	16.5(.650)	11
7~13	24.0(.945)	–	24.5(.965)	30.5(1.200)	24.5(.965)	9
14~18	32.0(1.260)	28.40(1.118)	32.5(1.280)	38.5(1.516)	32.5(1.280)	7
9 12 20,24,26	44.0(1.732)	40.40(1.596)	44.5(1.752)	50.5(1.988)	44.5(1.752)	5

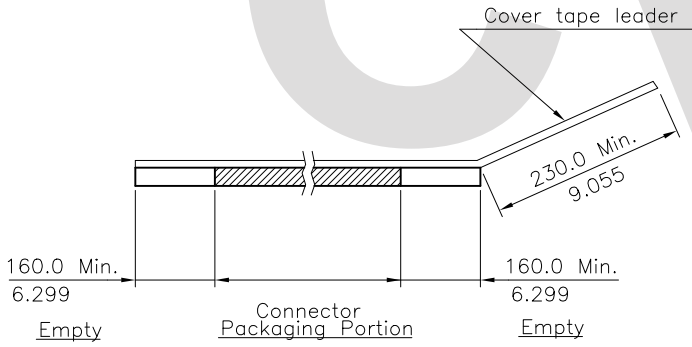

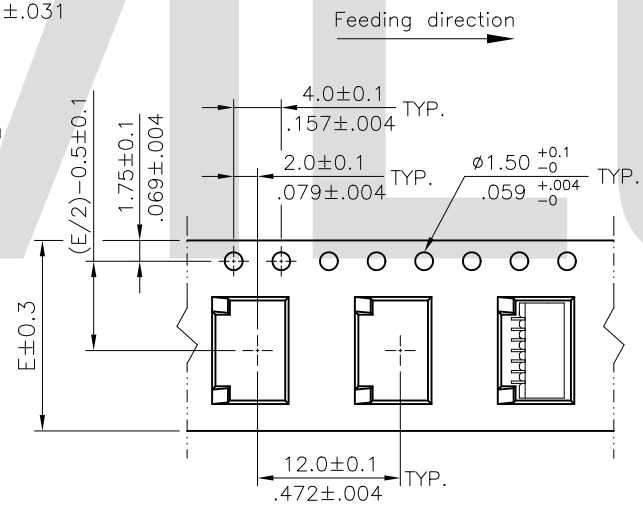

WIDTH : 16,24 mm Carrier

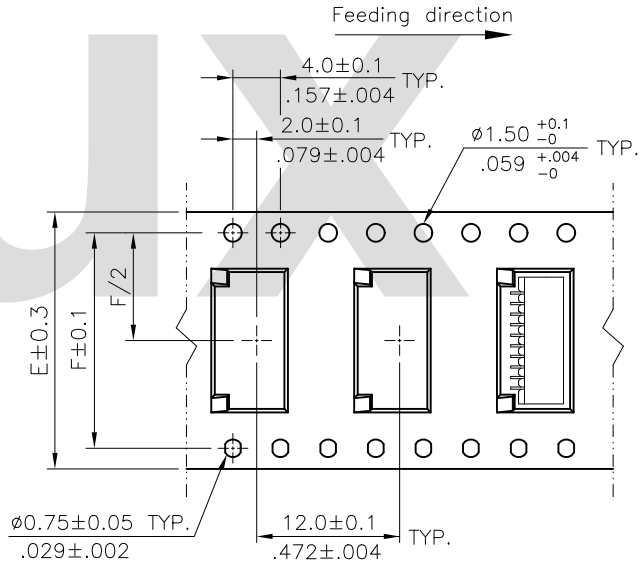

WIDTH : 32,44 mm Carrier

RoHS Compliant

SYM	NAME	DATE	REVISIONS
12	Sun	1/28-14'	ECNT114016
11	Enya	11/11-13'	ECNT113103/ECRB113027
11	Sun	7/05-11'	ECR10039-2/ECN11060
10	Hank	2/25-09'	ECR09013-0/ECN09078

CVILUX CORP 2014.02.14 ISSUED

		DATE
DRAWN BY:	Sun	1/28-14'
ENGINEER:	Eisley	1/29-14'
CHECKED BY:	Eisley	1/29-14'
APPROVED BY:	David	1/29-14'

UNIT: mm / inch

TOLERANCE UNLESS OTHERWISE SPECIFIED

.X ±	X.° ± 1°
.XX ±	.X° ±
.XXX ±	.XX° ±

TITLE: 1.00MM(.079") WIRE TO BOARD CONNECTOR

MATERIAL:

FINISH:

瀚荃股份有限公司
CviLux Corporation

DRAWING NO.	CI1112SN	PART NO.	CI11**M*H*0-LF
SCALE		SHEET 2 OF 2	