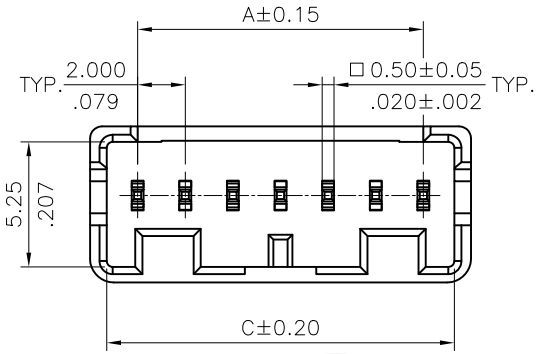

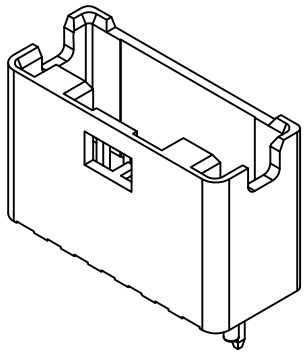

Material
Insulator: Halogen Free Plastic
UL 94V-0
Contact: Copper alloy

DIM. A = 2.0 x NO. OF SPACES
DIM. B = DIM. A + 4.0
DIM. C = DIM. A + 2.6
* AVAILABLE IN 2 THROUGH 10

ORDERING CODE

CI09	**	P	*	V	K	*	-NH
①	②	③	④	⑤	⑥	⑦	⑧

① Series No.
② Contact: 02 to 10
③ P= DIP header
④ Plating :
1= 3.05μm(120μ") Min. Matte Tin over 0.76um(30u") Nickel
⑤ Contact type: V= Straight
⑥ Option: K= PIN kinked (Standard)
⑦ Color: 0= Nature , 3= Red
⑧ -NH= For Lead Free IR Processes and Halogen-Free

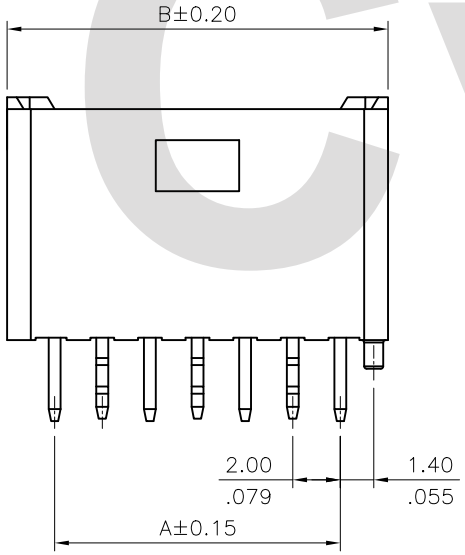

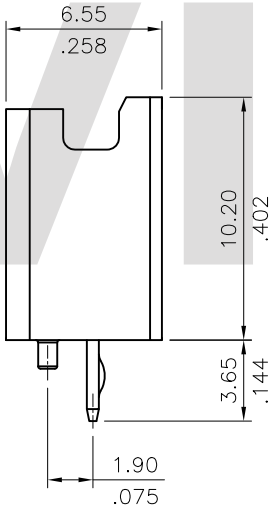

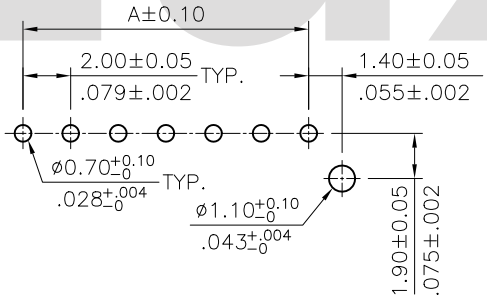

Recommended P.C. Board Layout

Halogen-Free

Lead Free Process

RoHS Compliant

SYM	NAME	DATE	REVISIONS
4			
3			
2			
1			

CVILUX CORP 2015.03.26 ISSUED

		DATE
DRAWN BY:	Hank	3/09-15'
ENGINEER:	Clark	3/13-15'
CHECKED BY:	Eisley	3/13-15'
APPROVED BY:	Eisley	3/13-15'

UNIT: mm / inch

TOLERANCE UNLESS OTHERWISE SPECIFIED

.X ± 0.30/.012	X.° ± 1°
.XX ± 0.20/.008	.X° ±
.XXX ± 0.10/.004	.XX° ±

TITLE: 2.0mm Pitch WTB Connector

MATERIAL:

FINISH:

瀚荃股份有限公司
CviLux Corporation

DRAWING NO.	CI0901SA	PART NO.	CI09**P*VK0-NH
SCALE	3 / 1	SHEET 1 OF 1	

CviLux