*Material: Nylon 66 UL 94V-2

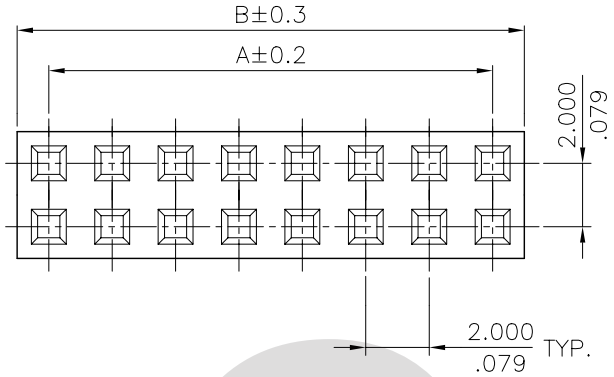

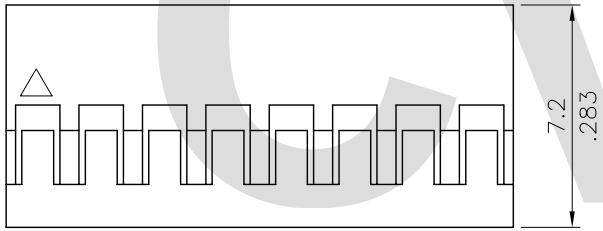

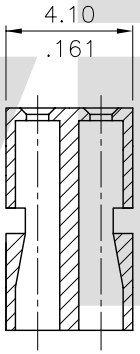

⚠2 Ordering Code:

CI04 ** S 00* 0

① ② ③ ④ ⑤

① Series No.
② No. of Circuits
③ Contact type: S= Connector housing
④ Color: 000= Color Nature, 001= Color black
⑤ Other option:
0= Without polarizing rib

⚠1 ⚠2

Circuits	Dimension		Circuits	Dimension	
	A	B		A	B
4	2.00(.079)	4.3(.169)	30	28.00(1.102)	30.3(1.193)
6	4.00(.157)	6.3(.248)	32	30.00(1.181)	32.3(1.272)
8	6.00(.236)	8.3(.327)	34	32.00(1.260)	34.3(1.350)
10	8.00(.315)	10.3(.406)	36	34.00(1.339)	36.3(1.429)
12	10.00(.394)	12.3(.484)	38	36.00(1.418)	38.3(1.508)
14	12.00(.472)	14.3(.563)	40	38.00(1.496)	40.3(1.587)
16	14.00(.551)	16.3(.642)	42	40.00(1.575)	42.3(1.665)
18	16.00(.630)	18.3(.720)	44	42.00(1.654)	44.3(1.744)
20	18.00(.709)	20.3(.799)	46	44.00(1.732)	46.3(1.823)
22	20.00(.787)	22.3(.878)	48	46.00(1.800)	48.3(1.902)
24	22.00(.866)	24.3(.957)	50	48.00(1.890)	50.3(1.980)
26	24.00(.945)	26.3(1.035)	60	58.00(2.283)	60.3(2.374)
28	26.00(1.024)	28.3(1.114)	80	78.00(3.071)	80.3(3.161)

RoHS Compliant

SYM	NAME	DATE	REVISIONS
⚠4			
⚠3			
⚠2	Sandy	7/09/07'	ECN07270
⚠1	Jim	7/11/06'	ECN06208

CVILUX CORP. 2007.07.18 ISSUED

		DATE
DRAWN BY:	Sandy	7/10-07'
ENGINEER:	Eisley	7/13-07'
CHECKED BY:	David	7/13-07'
APPROVED BY:	Alex	7/13-07'

UNIT: mm / inch

TOLERANCE UNLESS OTHERWISE SPECIFIED

.X ± 0.30/.012	X.° ± 1°
.XX ± 0.20/.008	.X° ±
.XXX ± 0.10/.004	.XX° ±

TITLE: 2.00mm(.079") DUAL ROW CRIMP TERMINAL HOUSING

MATERIAL:

FINISH:

瀚荃股份有限公司
CviLux Corporation

DRAWING NO.	CI0404SC	PART NO.	CI04**S00*0
SCALE	4 / 1	SHEET 1 OF 1	

CviLux