MATERIAL :
* HOUSING: HEAT RESISTANCE PLASTIC, UL 94V-0, COLOR NATURE
* COVER: HEAT RESISTANCE PLASTIC, UL 94V-0, COLOR BLACK
* CONTACT: PHOSPHOR BRONZE
* FITTING NAIL: BRASS WITH 100u" MIN MATTE TIN PLATED OVER 50u" MIN NICKEL

Ordering Code

CF31 ** * D 0 * * -10 -NH
① ② ③ ④ ⑤ ⑥ ⑦ ⑧ ⑨

①Series No.
②No. of Circuits: 04~30
③Plating code:
1= 2.00um(80u") Min. Matte Tin Plating on Contact area and Soldertails, 1.02um(40u") Nickel Underplating over all
2= 0.02um(0.8u") Min. Gold Flash Plating on Contact area and Soldertails, 1.02um(40u") Nickel Underplating over all
B= Contact area:0.38um(15u")Min. Gold plated Solder area:0.03um(1.2u")Min. gold-flash over all 1.02um(40u") Min. Nickel
④Contact style: D= Downside contact
⑤0= Color Nature
⑥Packing: R= Tape & Reel, T= Tube Packing
⑦Option: 4= Without Mylar
5= With Mylar
⑧-10= 1.0 Pitch
⑨-NH= For Lead Free IR Processed and Halogen Free

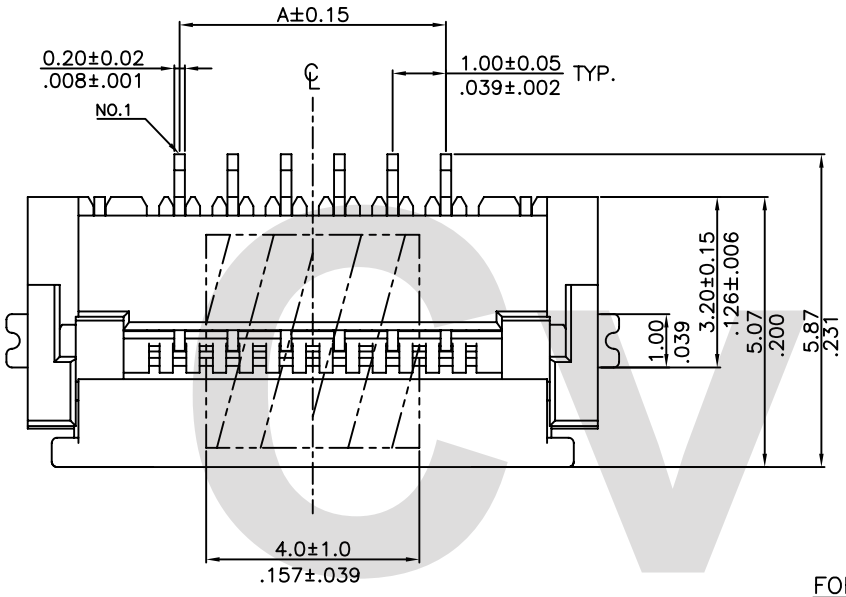

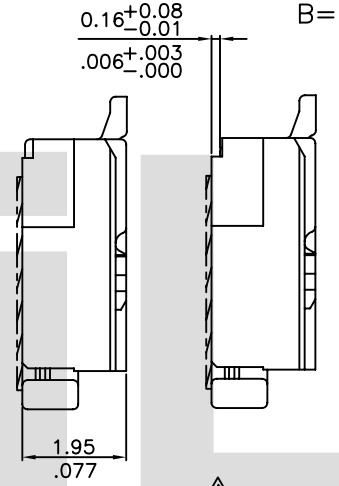

FOR OTHER PINS FOR 24&30PIN

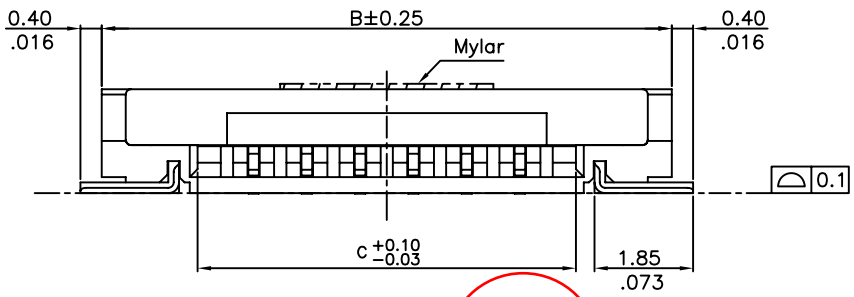

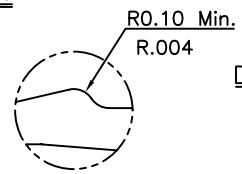

DETAIL A
(SCALE 4:1)

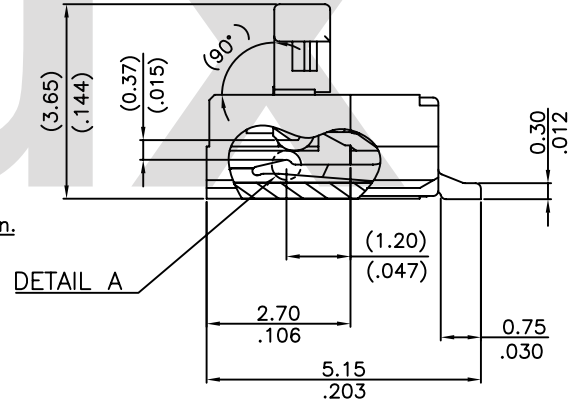

COVER OPEN STATE

Halogen-Free | Lead Free Process | RoHS Compliant

CVILUX CORP 2014.12.13 ISSUED

SYM	NAME	DATE	REVISIONS
4			
3	Claire	5/23-14'	ECRT213014/ECNT213010
2	Claire	1/22-14'	ECRT214003/ECNT214002
1	Claire	6/15-12'	ECR12047-5 ECR12037-5/ECN12030-5/ECR12043-5/ECN12037-5

		DATE
DRAWN BY:	Clarie	12/5-14'
ENGINEER:	Francis	12/5-14'
CHECKED BY:	Jerry	12/5-14'
APPROVED BY:	Socket	12/5-14'

UNIT: mm / inch

TOLERANCE UNLESS OTHERWISE SPECIFIED

.X ± 0.20/.008	X.° ±
.XX ± 0.15/.006	.X° ± 1°
.XXX ±	.XX° ±

TITLE: 1.00mm(.039") ZIF FFC/FPC ONE-TOUCH CONNECTOR

MATERIAL:

FINISH:

瀚荃股份有限公司
CviLux Corporation

DRAWING NO.	CF3104SD	PART NO.	CF31***D0**-10-NH
SCALE	10 / 1	SHEET	1 OF 3

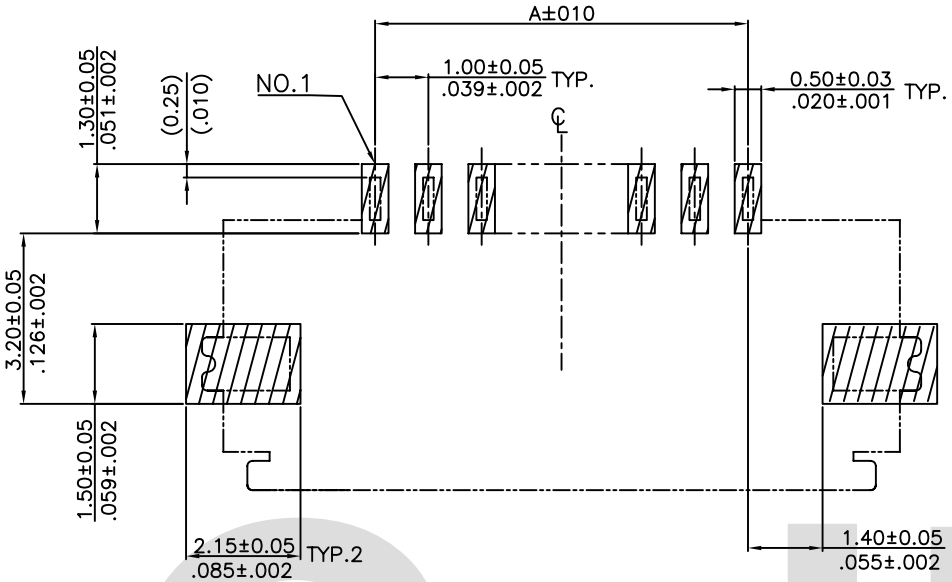

RECOMMENDED PCB LAYOUT

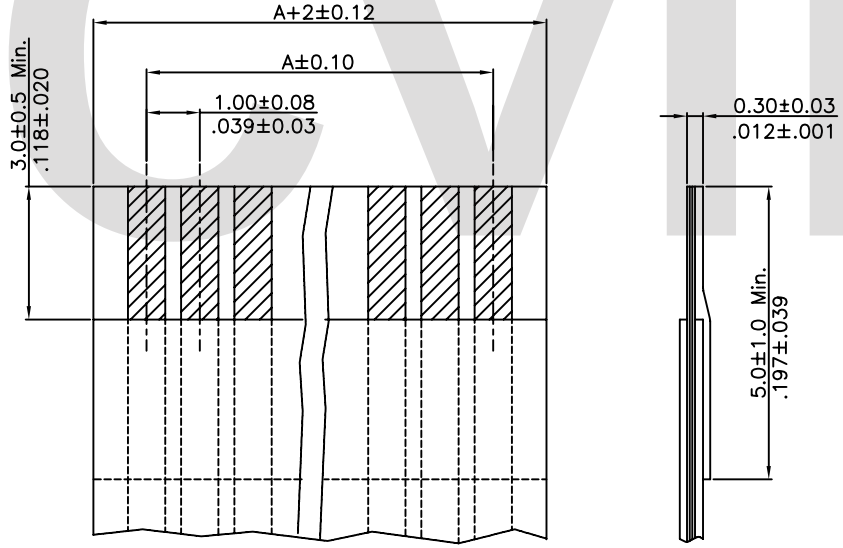

Accommodated FFC/FPC

Circuits	Dimension		
	A	B	C
4	3.00(.118)	8.70(.343)	5.10(.201)
5	4.00(.157)	9.70(.382)	6.10(.240)
6	5.00(.197)	10.70(.421)	7.10(.280)
7	6.00(.236)	11.70(.461)	8.10(.319)
8	7.00(.276)	12.70(.500)	9.10(.358)
9	8.00(.315)	13.70(.539)	10.10(.398)
10	9.00(.354)	14.70(.579)	11.10(.437)
11	10.00(.394)	15.70(.618)	12.10(.476)
12	11.00(.433)	16.70(.657)	13.10(.516)
13	12.00(.472)	17.70(.697)	14.10(.555)
14	13.00(.512)	18.70(.736)	15.10(.594)
15	14.00(.551)	19.70(.776)	16.10(.634)
16	15.00(.591)	20.70(.815)	17.10(.673)
17	16.00(.630)	21.70(.854)	18.10(.713)
18	17.00(.669)	22.70(.894)	19.10(.752)
19	18.00(.709)	23.70(.933)	20.10(.791)
20	19.00(.748)	24.70(.972)	21.10(.831)
21	20.00(.787)	25.70(1.012)	22.10(.870)
22	21.00(.827)	26.70(1.051)	23.10(.909)
23	22.00(.866)	27.70(1.091)	24.10(.949)
24	23.00(.906)	28.70(1.130)	25.10(.988)
25	24.00(.945)	29.70(1.169)	26.10(1.028)
26	25.00(.984)	30.70(1.209)	27.10(1.067)
27	26.00(1.024)	31.70(1.248)	28.10(1.106)
28	27.00(1.063)	32.70(1.287)	29.10(1.146)
29	28.00(1.102)	33.70(1.327)	30.10(1.185)
30	29.00(1.142)	34.70(1.366)	31.10(1.224)

Halogen-Free

Lead Free Process

RoHS Compliant

SYM	NAME	DATE	REVISIONS
4			
3	Claire	5/23-14'	ECRT213014/ECNT213010
2	Claire	1/22-14'	ECRT214003/ECNT214002
1	Claire	6/15-12'	ECR12047-5 ECR12037-5/ECN12030-5/ECR12043-5/ECN12037-5

CVILUX CORP 2014.12.13 ISSUED

		DATE
DRAWN BY:	Clarie	12/5-14'
ENGINEER:	Francis	12/5-14'
CHECKED BY:	Jerry	12/5-14'
APPROVED BY:	Socket	12/5-14'

UNIT: mm / inch

TOLERANCE UNLESS OTHERWISE SPECIFIED

.X ± 0.20/.008	X.° ±
.XX ± 0.15/.006	.X° ± 1°
.XXX ±	.XX° ±

TITLE: 1.00mm(.039") ZIF FFC/FPC ONE-TOUCH CONNECTOR

MATERIAL:

FINISH:

瀚荃股份有限公司
CviLux Corporation

DRAWING NO.	CF3104SD	PART NO.	CF31***D0**-10-NH
SCALE	10 / 1	SHEET 2 OF 3	

Notes:

1. 10 sprocket hole pitch cumulative tolerance ±0.2
2. Camber not to exceed 1mm in 100mm.
3. Material: Black Advantek Polystyrene.
4. Pocket position relative to sprocket hole measured as true position of pocket, not pocket hole.
5. All dimensions meet EIA-481-B requirements.
6. Quantity: 2000 PCS/REEL

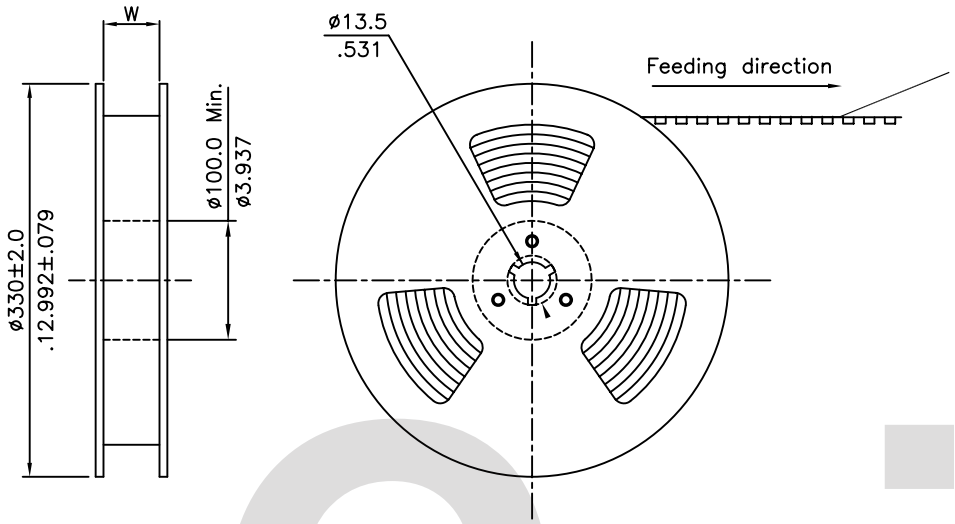

Circuits	Dimension	
	W	F
4–12	24.0(.945)	11.50(.453)
13–16	32.0(1.260)	14.20(.559)
17–27	44.0(1.732)	20.20(.795)
28–30	56.0(2.205)	26.2(1.031)

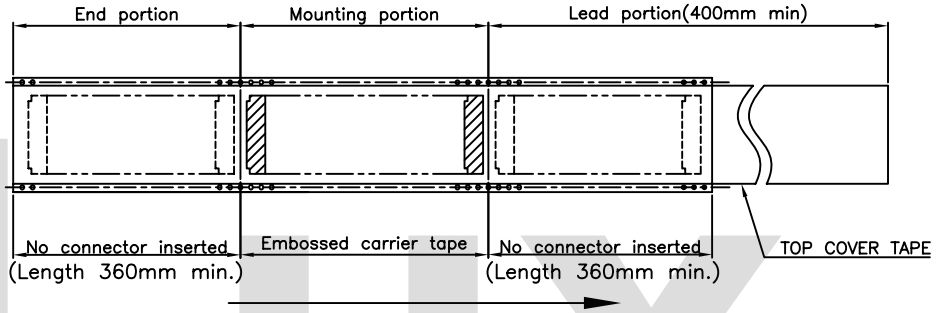

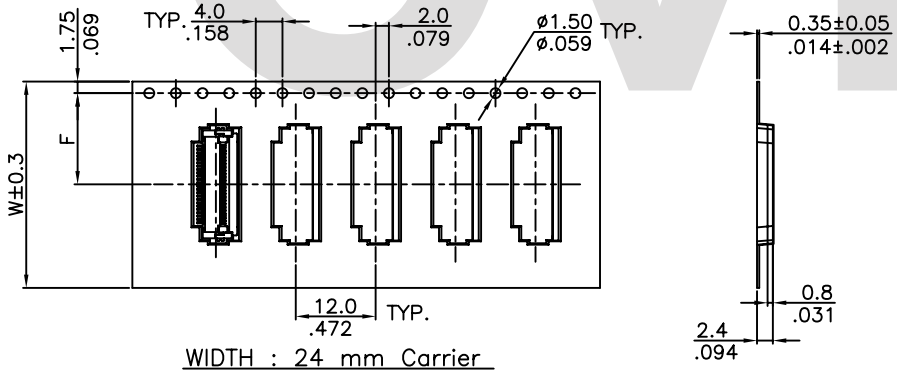

WIDTH : 24 mm Carrier

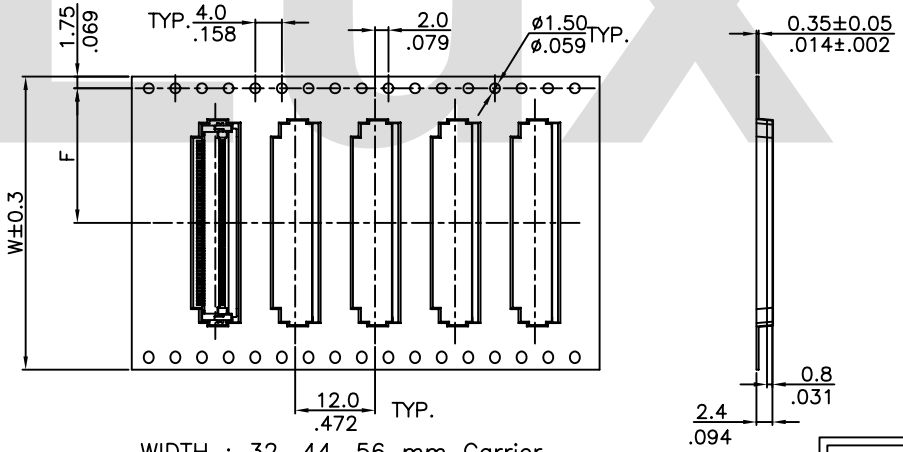

WIDTH : 32, 44, 56 mm Carrier

RoHS Compliant

SYM	NAME	DATE	REVISIONS
4			
3	Claire	5/23-14'	ECRT213014/ECNT213010
2	Claire	1/22-14'	ECRT214003/ECNT214002
1	Claire	6/15-12'	ECR12047-5 ECR12037-5/ECN12030-5/ECR12043-5/ECN12037-5

CVILUX CORP 2014.12.13 ISSUED

		DATE
DRAWN BY:	Clarie	12/5-14'
ENGINEER:	Francis	12/5-14'
CHECKED BY:	Jerry	12/5-14'
APPROVED BY:	Socket	12/5-14'

UNIT: mm / inch

TOLERANCE UNLESS OTHERWISE SPECIFIED

.X ± 0.15/.006	X° ±
.XX ± 0.10/.004	.X° ± 1°
.XXX ±	.XX° ±

TITLE: 1.00mm(.039") ZIF FFC/FPC ONE-TOUCH CONNECTOR

MATERIAL:

FINISH:

瀚荃股份有限公司
CviLux Corporation

DRAWING NO.	CF3104SD	PART NO.	CF31***D0**-10-NH
SCALE	10 / 1	SHEET	3 OF 3

CviLux