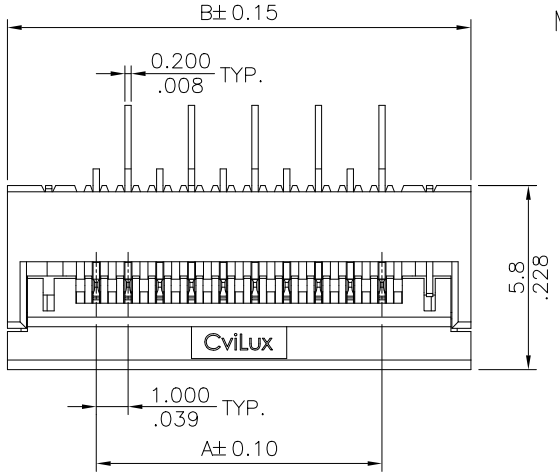


Material :

* Body : High temperature plastic UL 94V-0, Color Nature
* Slider : High temperature plastic UL 94V-0, Color Black
* Contact : Phosphor Bronze
* Fixed tab : Brass with Matte Tin Plated

A = 1.00 x No. of Spaces
B = A + 5.6
C = A + 2.1
D = A + 3.0
* Available in 4 through 32 circuits

## Ordering Code

| CF25 | 30 | 2 | H | 0 | T0 | - | 10 | - | NH |
|---|---|---|---|---|---|---|---|---|---|
| ① | ② | ③ | ④ | ⑤ | ⑥ | | ⑦ | | ⑧ |

① Series No.
② No. of Circuits
③ Plating code:
1= Matte Tin plated over Nickel
2= Gold flash over 50μ"min. Nickel
④ Contact style:
H= Side Entry DIP Type (Downside Contact)
⑤ Color: 0= Nature
⑥ Other option: T0= Tube Packing
⑦ Pitch: 10= 1.00 mm
⑧ -NH= For Lead Free IR Processes and Halogen-Free

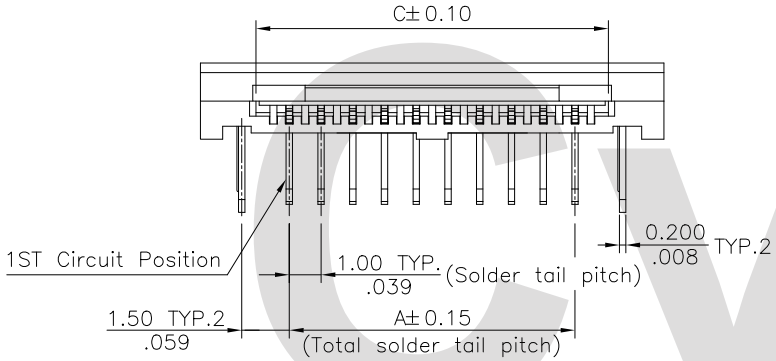


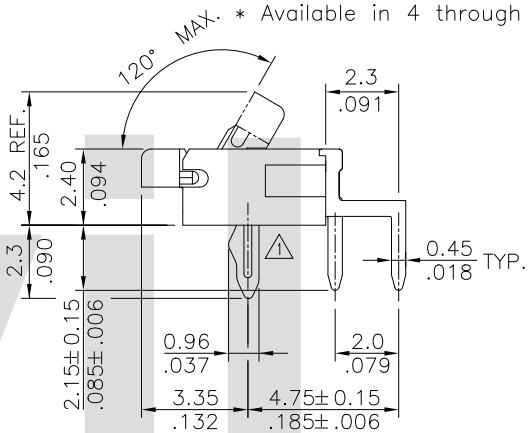


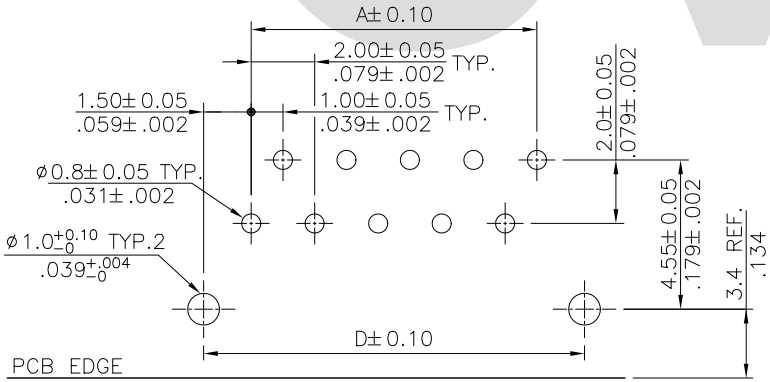


Recommended P.C. Board Layout

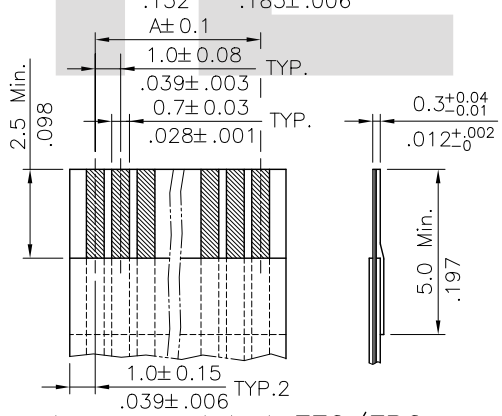


Accommodated FFC/FPC

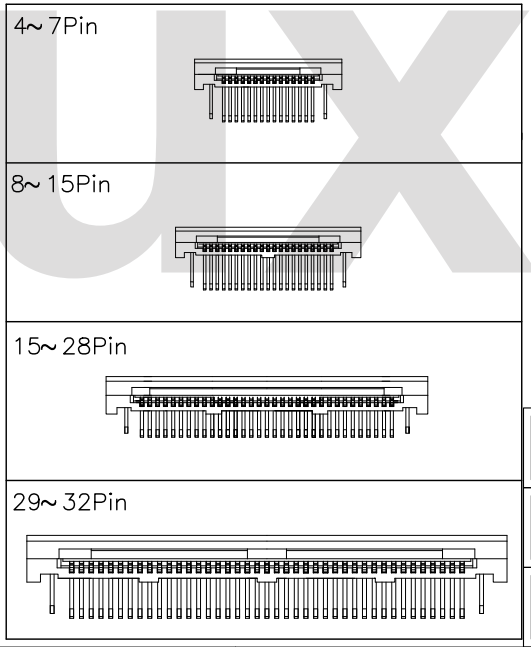


Halogen-Free

Lead Free Process

RoHS Compliant

| SYM | NAME | DATE | REVISIONS |
|---|---|---|---|
| 4 | | | |
| 3 | | | |
| 2 | Enya | 1/9-13' | ECN13005-0 |
| 1 | Sun | 6/03-11' | ECR11021-1/ECN11105 |

CVILUX CORP 2013.01.15 ISSUED

| | | DATE |
|---|---|---|
| DRAWN BY: | Enya | 1/9-13' |
| ENGINEER: | Eisley | 1/11-13' |
| CHECKED BY: | Eisley | 1/11-13' |
| APPROVED BY: | David | 1/11-13' |

UNIT: mm / inch

TOLERANCE UNLESS OTHERWISE SPECIFIED

| | |
|---|---|
| .X ± 0.15/.006 | X.° ± 1° |
| .XX ± 0.10/.004 | .X° ± |
| .XXX ± 0.05/.002 | .XX° ± |

TITLE: 1.00mm(.039") ZIF FFC/FPC ONE-TOUCH CONNECTOR

MATERIAL:

FINISH:

瀚荃股份有限公司
CviLux Corporation

| DRAWING NO. | CF2531SC | PART NO. | CF25***H0*0-10-NH |
|---|---|---|---|
| SCALE | 4 / 1 | SHEET 1 OF 1 | |