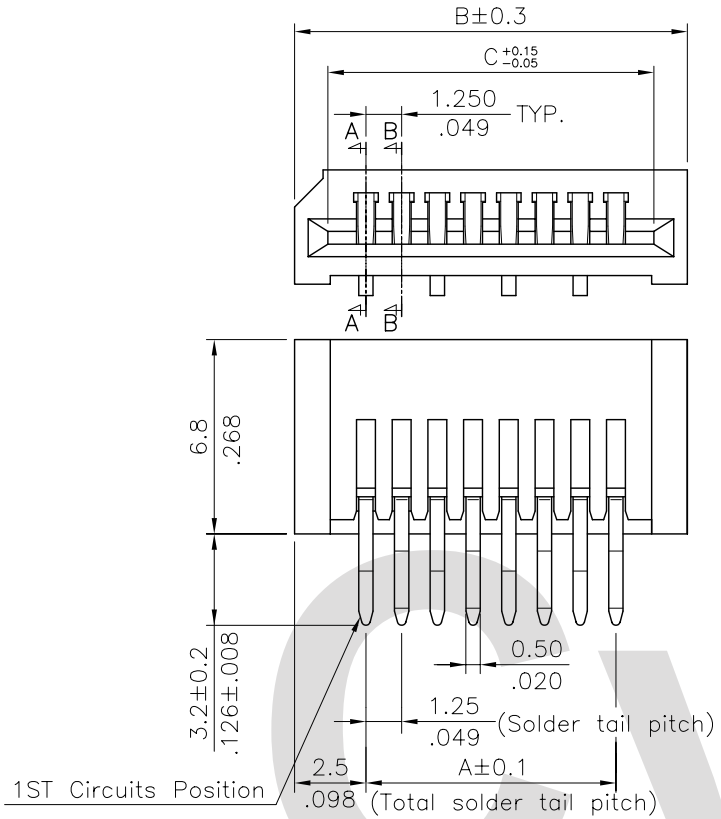

A = 1.25 x No. of Spaces
B = A + 5.0
C = A + 2.66
* Available in 3 through 36 circuits

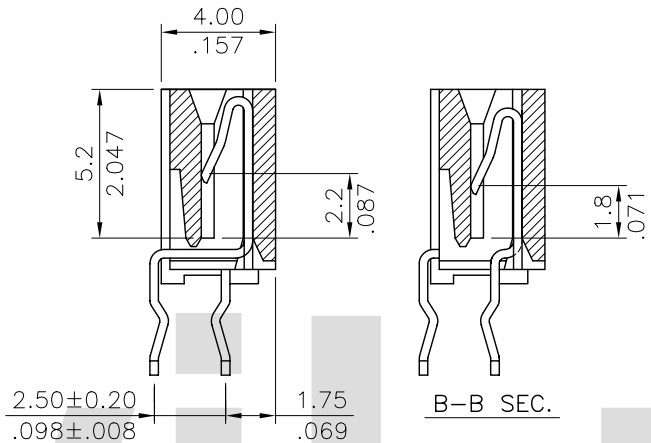

Material:
* Insulation: Nylon46 with 40% GF.
UL 94V–0, Color Black
* Contact: Phosphor Bronze

Ordering Code

CF12 ** 1 V0 T 0 -LF
① ② ③ ④ ⑤ ⑥ ⑦

①Series No.
②No. of Circuits
③Plating code:
1= 2.54μm(100μ") Tin over
0.76μm(30μ") Nickel(Matte Tin Finish)
④Contact type : V0= Straight Dip type
⑤Packing : T= Tube Packaged
⑥Other option: 0= Standard
⑥–LF= For Leadfree IR Processes

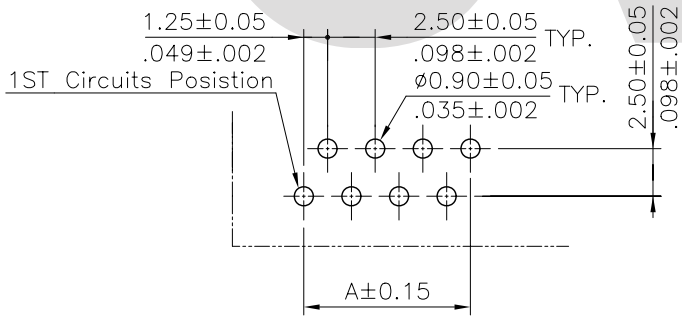

Recommended P.C. Board Layout

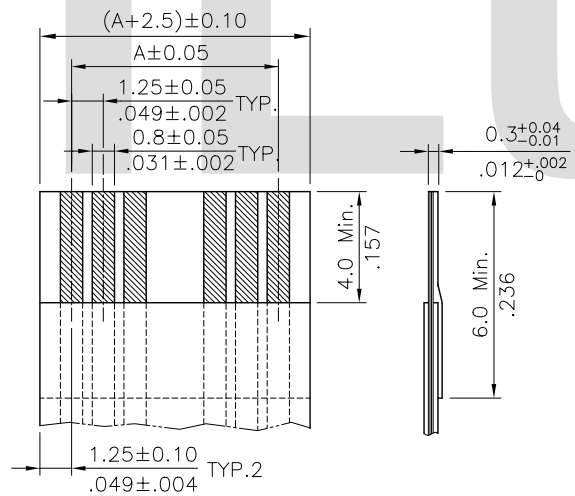

* ACCOMMODATED FFC

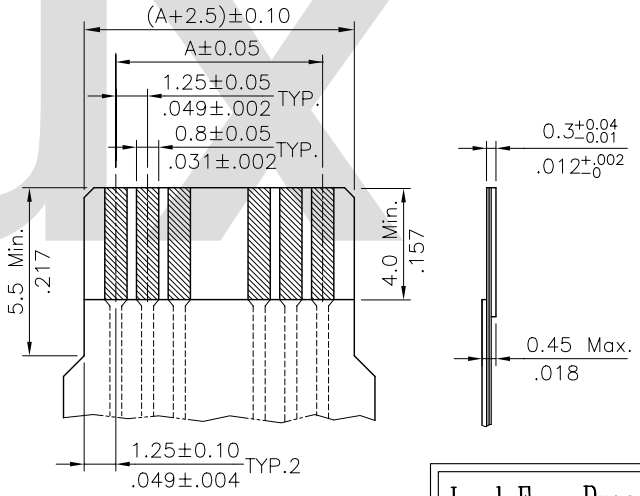

* ACCOMMODATED FPC

Lead Free Process

RoHS Compliant

SYM	NAME	DATE	REVISIONS
4			
3			
2			
1			

CVILUX.XORP 2008.08.26 ISSUED

		DATE
DRAWN BY:	Sandy	8/25-08'
ENGINEER:	Eisley	8/25-08'
CHECKED BY:	Alex	8/25-08'
APPROVED BY:	Alex	8/25-08'

UNIT: mm / inch

TOLERANCE UNLESS OTHERWISE SPECIFIED

.X ± 0.15/.006	X.° ± 1°
.XX ± 0.10/.004	.X° ±
.XXX ± 0.05/.002	.XX° ±

TITLE: 1.25mm(.049") ST. DIP TYPE LIF FFC/FPC CONNECTOR

MATERIAL:

FINISH:

瀚荃股份有限公司
CviLux Corporation

DRAWING NO.	CF1212SA	PART NO.	CF12**1VOTO–LF
SCALE	3 / 1	SHEET 1 OF 1	