Material:
* Insulation:
  P/N: CS610721000 (LCP UL 94V-0)
  P/N: CS6107210A0 (Nylon 46 UL 94V-0)
  Color Nature
* Contact: Bronze
* Latch spring: Stainless steel

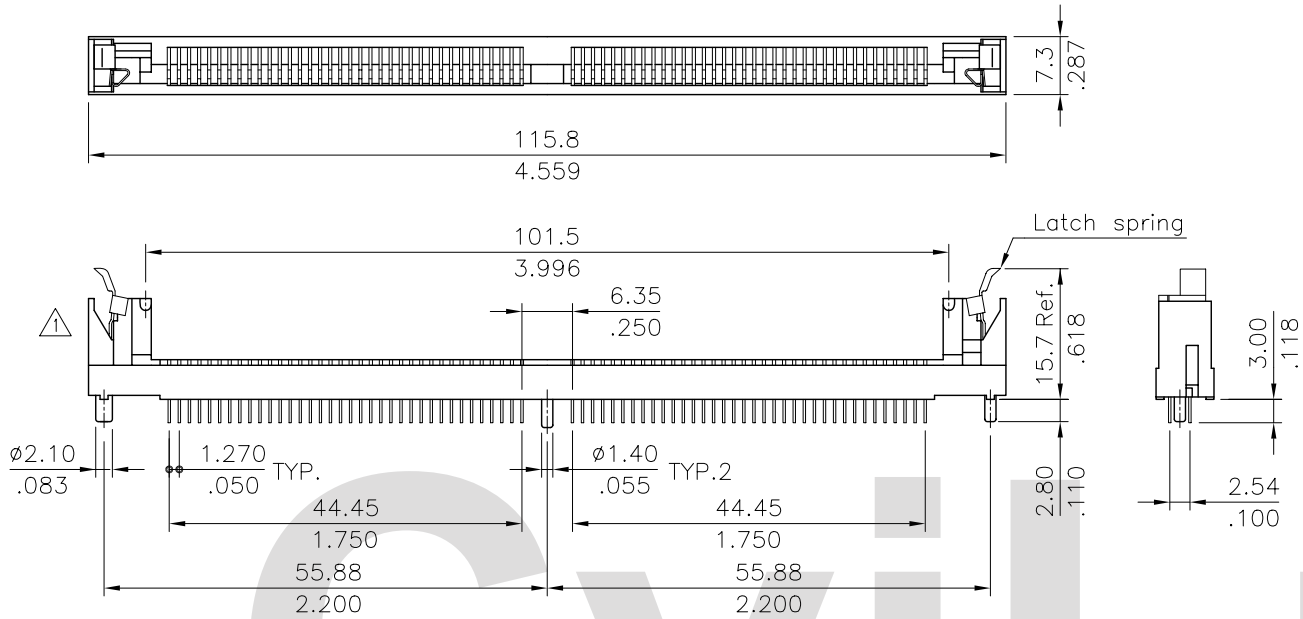

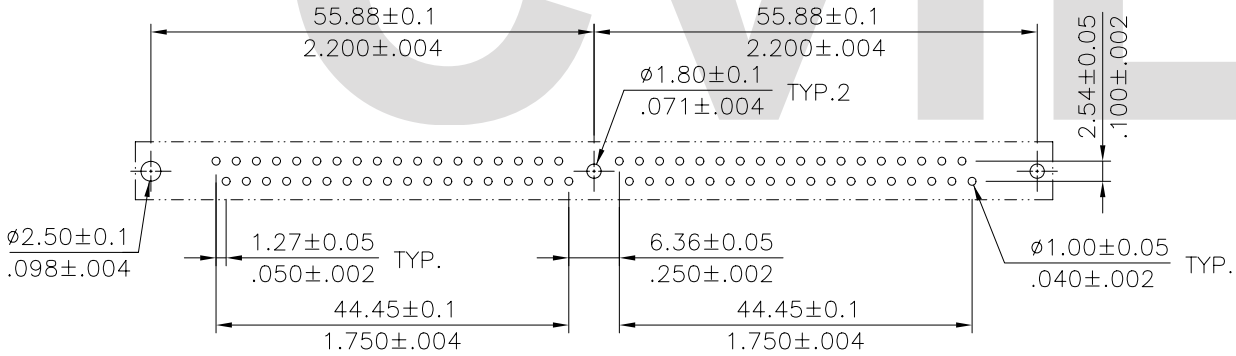

Recommended P.C. Board Layout

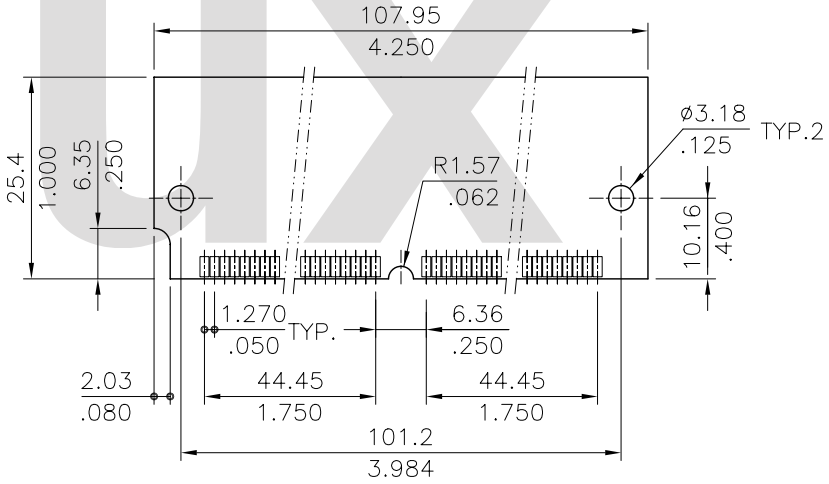

Module P.C. Board Layout

RoHS Compliant

SYM	NAME	DATE	REVISIONS
4			
3			
2			
1	Sandy	4/28/05'	ECN05148

CVILUX CORP. 2005.05.05 ISSUED

		DATE
DRAWN BY:	Sandy	4/28/05'
ENGINEER:	David	4/29/05'
CHECKED BY:	Alex	5/2/05'
APPROVED BY:	Alex	5/2/05'

UNIT: mm / inch

TOLERANCE UNLESS OTHERWISE SPECIFIED

.X ±0.30/.012	X.° ± 1°
.XX ±0.20/.008	.X° ±
.XXX ±0.10/.004	.XX° ±

TITLE: 1.27MM(.050") SINGLE ROW SIMM SOCKET

MATERIAL:

FINISH:

瀚荃股份有限公司
CviLux Corporation

DRAWING NO.	CS6101SE	PART NO.	CS610721000 CS6107210A0
SCALE	2/1	SHEET 1 OF 1	