No.	DESCRIPTION	MATERIAL	FINISH	Q'TY
1	BODY	BRASS	GOLD PLATED	1
2	INSULATOR	TEFLON	–	1
3	CONTACT	BRASS	GOLD PLATED	1

Specifications:

Electrical

- Impedance: 50Ω
- Frequency Range: 0–6 GHz
- Working Voltage: 170 VRMS Max.
- Dielectric Withsanding Voltage: 500 VRMS Min.
- VSWR: 1.3 Max.
- Contact Resistance
  - Center contact: 5mΩ Max.
  - Ouer Contact: 2.5mΩ Max.
- Insulator Resistance: 1000MΩ Min.

Mechanical & Environmental

- Engagement Force: 3.4 lbs. Max.
- Disengagement Force: 1.4–3.4 lbs.
- Contact Retention: 2.3 lbs. Min.
- Durability (Mating): 500 cycles Min.
- Temperature Range: –65°C to 155°C
- Vibration: 3 cycles, 3 opposite directions, 10–150 Hz
  10–60 Hz: 0.75mm/0.030 in., 60–150 Hz 10G's
- Thermal Shock: MIL–STD–202 Method 107
- Humidity: MIL–STD–202 Method 103 Test Cond.B
- Mechanical Shock: MIL–STD–202 Method 213 Test Cond.B

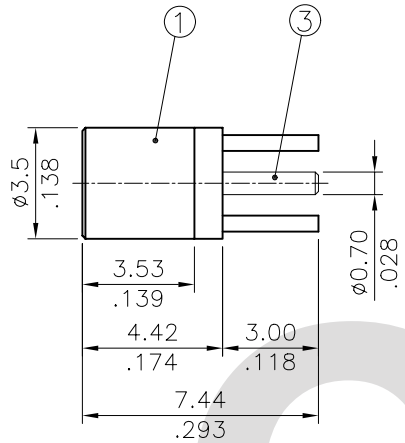

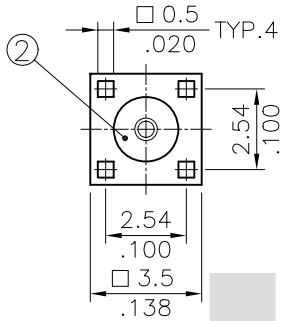

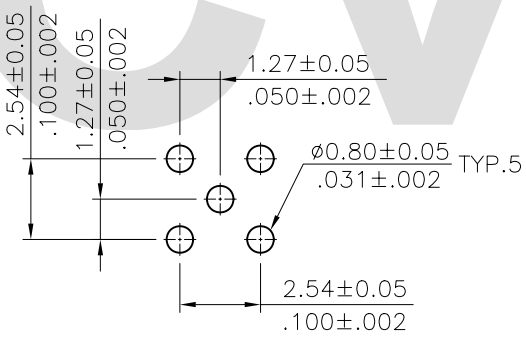

Recommended P.C. Board Layout

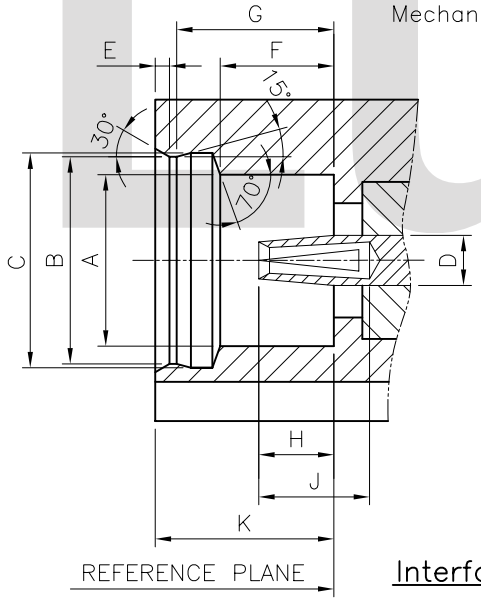

DIM.	Min.	Max.
A	2.41(.095)	–
B	2.87(.113)	2.90(.114)
C	3.00(.118)	3.04(.120)
D	0.68(.026)	0.72(.028)
E	–	0.23(.009
F	1.57(.062)	1.63(.064)
G	2.30(.091)	2.34(.092)
H	0.90(.035)	1.20(.047)
J	1.40(.055)	–
K	2.60(.102)	–

Interface Mating Dimensions

RoHS Compliant

SYM	NAME	DATE	REVISIONS
4			
3			
2			
1			

CVILUX.CORP 2008.03.14 ISSUED

		DATE
DRAWN BY:	Sun	3/13–08'
ENGINEER:	Eisley	3/13–08'
CHECKED BY:	David	3/14–08'
APPROVED BY:	Alex	3/14–08'

UNIT: mm / inch

TOLERANCE UNLESS OTHERWISE SPECIFIED

X.	±0.50/.020	X.° ± 1°
.X	±0.30/.012	.X° ±
.XX	±0.15/.006	.XX° ±

TITLE: MMCX SERIES STRAIGHT PCB MOUNT TYPE JACK CONN.

MATERIAL:

FINISH:

瀚荃股份有限公司
CviLux Corporation

DRAWING NO.	CR0401SA	PART NO.	CR04S03225000
SCALE	4 / 1	SHEET 1 OF 1	

CviLux