No.	DESCRIPTION	MATERIAL	FINISH	Q'TY
1	BODY	BRASS	GOLD PLATED	1
2	CONTACT	BRASS	GOLD PLATED	1
3	INSULATOR	TEFLON	–	1
4	INNER BODY	BRASS	GOLD PLATED	1

Specifications:

Electrical

- Impedance: 50Ω
- Frequency Range: 0–4 GHz
- Working Voltage: 335 VRMS Max.
- Dielectric Withsanding Voltage: 1000 VRMS Min.
- VSWR: 1.3 Max.
- Contact Resistance
  - Center contact: 6mΩ Max.
  - Ouer Contact: 2mΩ Max.
- Insulator Resistance: 1000MΩ Min.

Mechanical & Environmental

- Engagement/Disengagement Force: 14 lbs. Max.
- Contact Retention: 4 lbs. Min.
- Durability (Mating): 500 cycles Min.
- Temperature Range: −65°C to 165°C
- Vibration: MIL–STD–202 Method 204 Test Cond.B
- Salt Spray: MIL–STD–202 Method 101 Test Cond.B
- Thermal Shock: MIL–STD–202 Method 107 Test Cond.B

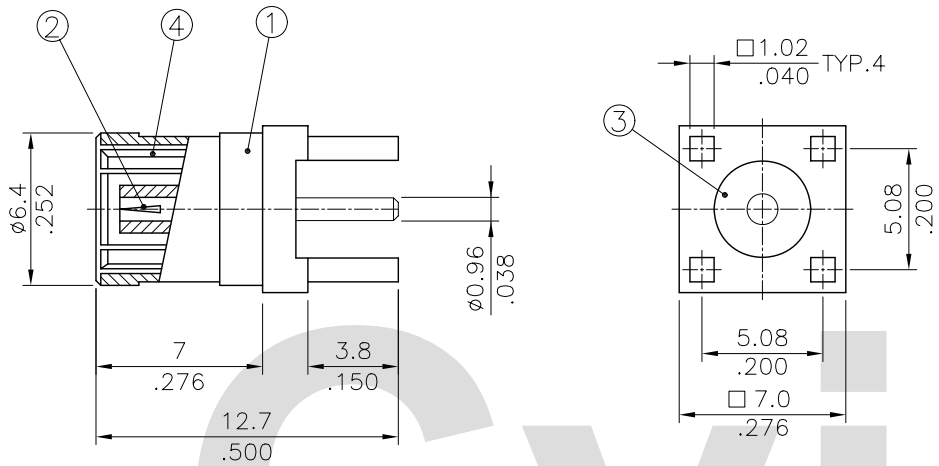

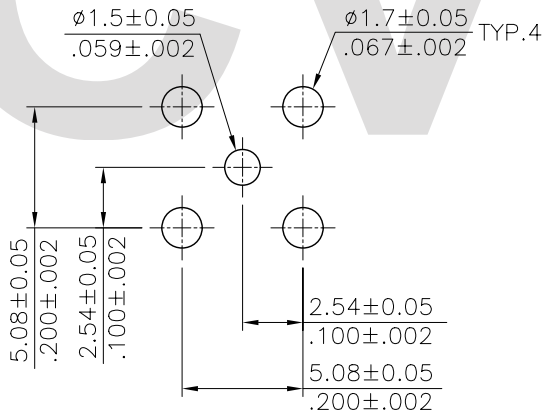

Recommended P.C. Board Layout

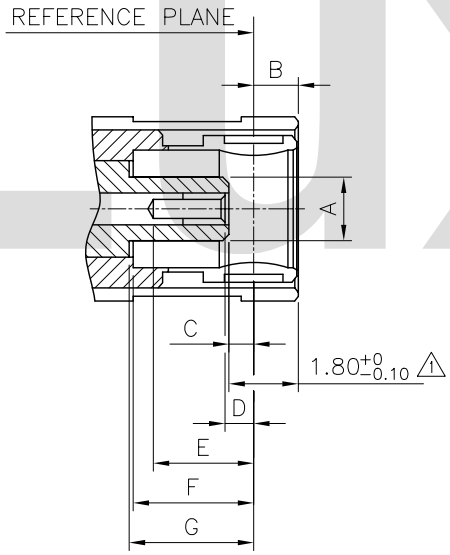

DIM.	Min.	Max.
A	2.00(.079)	2.06(.081)
B	–	1.62(.064)
C	0.18(.007)	–
D	0.18(.007)	0.94(.037)
E	2.97(.117)	–
F	3.58(.141)	–
G	3.58(.141)	–

Interface Mating Dimensions

RoHS Compliant

SYM	NAME	DATE	REVISIONS
△4			
△3			
△2			
△1	Sun	5/15–09'	ECN09249

CVILUX CORP 2009.05.19 ISSUED

		DATE
DRAWN BY:	Sun	5/15–09'
ENGINEER:	Eisley	5/15–09'
CHECKED BY:	Eisley	5/15–09'
APPROVED BY:	Alex	5/15–09'

UNIT: mm / inch

TOLERANCE UNLESS OTHERWISE SPECIFIED

X.	±0.50/.020	X.° ± 1°
.X	±0.30/.012	.X° ±
.XX	±0.15/.006	.XX° ±

TITLE: SMB SERIES STRAIGHT PCB MOUNT TYPE PLUG CONN.

MATERIAL:

FINISH:

瀚荃股份有限公司 CviLux Corporation

DRAWING NO.	CR0205SB	PART NO.	CR02P03225000
SCALE	2 / 1	SHEET 1 OF 1	

CviLux