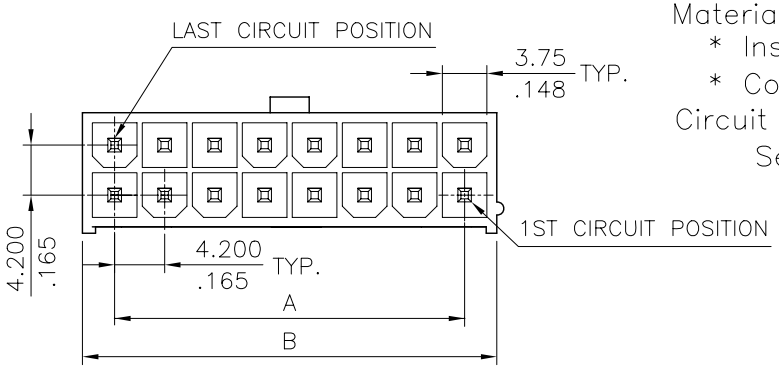

Material:
* Insulation: Nylon 66, Color Nature
* Contact: Brass

Circuit Pattern Schedule:
See Drawing No: CP0111S*

Part No.	Dimension	
	C	D
CP-013**1J0	9.20(.362)	3.50(.138)
CP-013**1JA	9.20(.362)	17.00(.669)
CP-013**1JB	9.20(.362)	28.00(1.102)
CP-013**1JC	9.20(.362)	23.80(.937)
CP-013**1JE	9.20(.362)	5.00(.197)
CP-013**1JF	9.20(.362)	13.00(.512)
CP-013**1JG	10.20(.402)	3.50(.138)

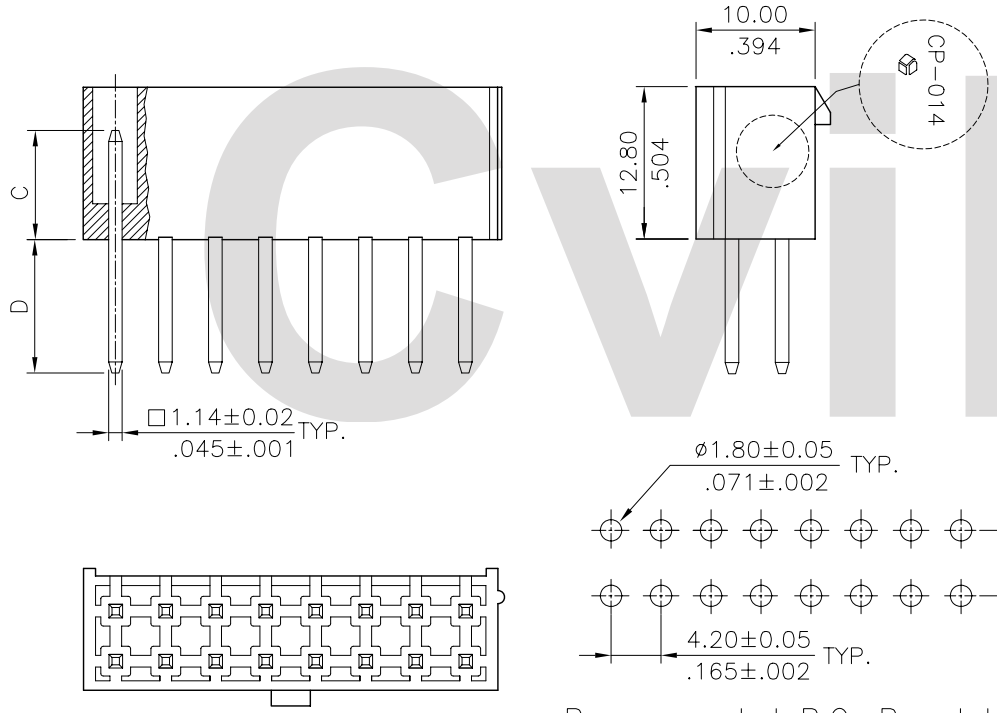

Recommended P.C. Board Layout

Ordering Code:

CP-01 3 ** * J *
① ② ③ ④ ⑤ ⑥

① Series No.
② Type of Connector:
3= Straight PCB mount header
③ No of Circuits:
④ Plating Code:
1= 3.05μm(120μ") Tin over 0.76μm(30μ") Nickel
2= Gold flash plated over Nickel
3= 0.38μm(15μ") Gold plated over 1.27μm(50μ") Nickel
4= 0.76μm(30μ") Gold plated over 1.27μm(50μ") Nickel
⑤ Variation:
J= Nylon 66 UL 94V-2 , Color Nature with SQ pin (Glow wire available)
⑥ Pin Length Code: Pin Length= Dim.C ; Dim.D

RoHS Compliant

CviLux

SYM	NAME	DATE	REVISIONS
4			
3			
2			
1			

CVILUX CORP. 2007.07.10 ISSUED

		DATE
DRAWN BY:	Sandy	7/06-07'
ENGINEER:	Eisley	7/06-07'
CHECKED BY:	David	7/06-07'
APPROVED BY:	David	7/06-07'

UNIT: mm / inch

TOLERANCE UNLESS OTHERWISE SPECIFIED

.X ± 0.38/.015	X.° ± 1°
.XX ± 0.25/.010	.X° ±
.XXX ± 0.10/.004	.XX° ±

TITLE: STRAIGHT HEADER CP-01 POWER CONNECTOR

MATERIAL:

FINISH:

瀚荃股份有限公司
CviLux Corporation

DRAWING NO.	CP0148AA	PART NO.	CP-013***J*
SCALE	2 / 1	SHEET	1 OF 1