Material :

Nylon 66 UL 94V-2

Color Nature

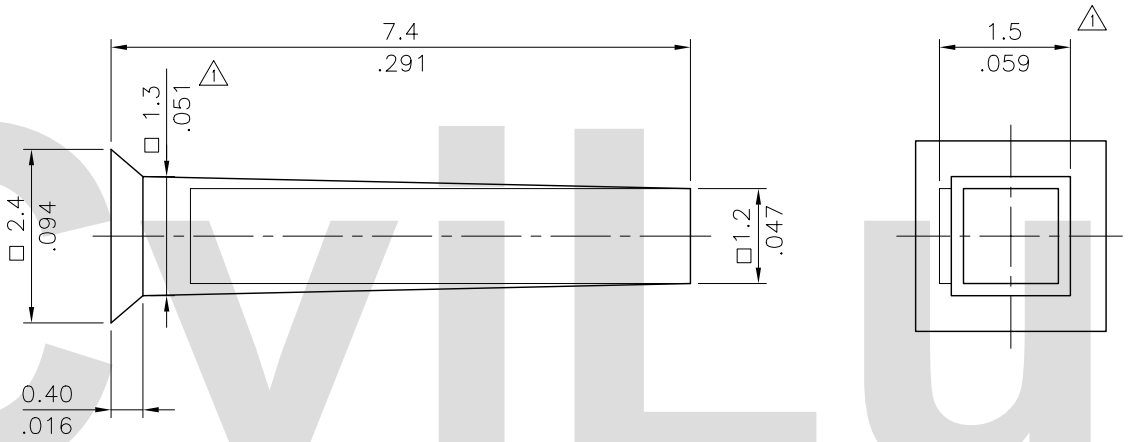

CviLux

RoHS Compliant

4						DATE	UNIT: mm / inch		TITLE: POLARIZING KEY FOR CI31, CI52, CI75, CI76 SERIES	瀚荃股份有限公司 CviLux Corporation		
3			CVILUX.CORP 2006.03.28 ISSUED	DRAWN BY:	Sandy	03/24-06'	TOLERANCE UNLESS OTHERWISE SPECIFIED					
2				ENGINEER:	Eisley	03/28-06'	.X ± 0.20 / .008	X.° ± 1°	MATERIAL:			
1	Sandy	3/24/06'	ECN06098/ECR06025-0	CHECKED BY:	David	03/28-06'	.XX ± 0.10 / .004	.X° ±	FINISH:	DRAWING NO. CIPK03SB	PART NO. CIPKB010200	
SYM	NAME	DATE	REVISIONS	APPROVED BY:	Alex	03/28-06'	.XXX ±	.XX° ±		SCALE 10 / 1	SHEET 1 OF 1	